NW-E503/E505/E507

SERVICE MANUAL

Ver. 1.5 2005.10

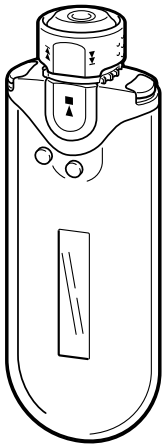

US Model
NW-E503/E505/E507
Canadian Model
NW-E505/E507
AEP Model
E Model
NW-E503/E505/E507
Tourist Model
NW-E505/E507

US and foreign patents licensed from Dolby Laboratories.

SPECIFICATIONS

Maximum recording time (Approx.)

NW-E503

ATRAC3	ATRAC3plus
4 hr. 10 min. (132 kbps)	2 hr. 10 min. (256 kbps)
5 hr. 20 min. (105 kbps)	8 hr. 40 min. (64 kbps)
8 hr. 30 min. (66 kbps)	11 hr. 40 min. (48 kbps)

MP3
2 hr. 10 min. (256 kbps)
4 hr. 20 min. (128 kbps)

NW-E505

ATRAC3	ATRAC3plus
8 hr. 30 min. (132 kbps)	4 hr. 20 min. (256 kbps)
10 hr. 40 min. (105 kbps)	17 hr. 30 min. (64 kbps)
17 hr. 00 min. (66 kbps)	23 hr. 30 min. (48 kbps)

MP3
4 hr. 20 min. (256 kbps)
8 hr. 50 min. (128 kbps)

NW-E507

ATRAC3	ATRAC3plus
17 hr. 00 min. (132 kbps)	8 hr. 50 min. (256 kbps)
21 hr. 40 min. (105 kbps)	35 hr. 00 min. (64 kbps)
34 hr. 10 min. (66 kbps)	47 hr. 00 min. (48 kbps)

MP3
8 hr. 50 min. (256 kbps)
17 hr. 40 min. (128 kbps)

Sampling frequency

ATRAC3, ATRAC3plus, MP3: 44.1 kHz

Audio compression technology

Adaptive Transform Acoustic Coding3 (ATRAC3)
Adaptive Transform Acoustic Coding3plus (ATRAC3plus)
MPEG1 Audio Layer-3 (MP3): 32 to 320 kbps, variable bit rate-compliant

Frequency response

20 to 20,000 Hz (single signal measurement)

FM Frequency range

Overseas model: 76.0 to 108.0 MHz
Other models: 87.5 to 108.0 MHz

IF (FM)

225 kHz

Antenna

Headphone cord antenna

Interface

Headphone: Stereo mini
USB

Signal-to-noise ratio (S/N)

80 dB or more (excluding ATRAC3 66 kbps)

Dynamic range

85 dB or more (excluding ATRAC3 66 kbps)

Operating temperature

5˚C to 35˚C (67˚F to 95˚F)

Power source

- Built-in rechargeable lithium-ion battery
- USB power (from a computer through supplied USB cable)

Battery life (continuous playback)*

ATRAC3 format: Approximately 50 hours (Playback at 105 kbps)
ATRAC3plus format: Approximately 45 hours (Playback at 48 kbps)
MP3 format: Approximately 40 hours (Playback at 128 kbps)
FM radio reception: Approximately 22 hours

* This is when the power save setting is normal. The battery duration will vary depending on temperature and usage.

Dimension

84.9 × 28.8 × 13.9 mm (3 $^{3}/_{8}$ × 1 $^{3}/_{16}$ × $^{9}/_{16}$ inches) (w/h/d, projecting parts not included)

Mass

Approx. 47 g (1.7 oz)

— Continued on next page —

PORTABLE IC AUDIO PLAYER

9-879-601-06
2005J16-1
© 2005.10

Sony Corporation
Connect Company
Published by Sony Engineering Corporation

SONY®

Supplied accessories

Headphones (1)
Dedicated USB cable (1)
Extension headphone cord (NW-E505/E507) (1)
Carrying pouch (NW-E505/E507) (1)
Clip (1)
CD-ROM for the SonicStage software, PDF file Operating Instructions, and PDF file SonicStage Operating Instructions (1)
Quick Start Guide

Design and specifications are subject to change without notice.

Microsoft, Windows and Windows Media are trademarks or registered trademarks of Microsoft Corporation in the United States and/or other countries.

TABLE OF CONTENTS

1. GENERAL 3

2. DISASSEMBLY
2-1. Disassembly Flow 5
2-2. Lid (Connector) 6
2-3. Cabinet (Inner) 6
2-4. Arm (Shuttle) 7
2-5. Knob (Shuttle) 8
2-6. MAIN Board 9
2-7. Organic El Indicator Module 10

3. TEST MODE 11

4. DIAGRAMS
4-1. Block Diagram 13
4-2. Printed Wiring Board – MAIN Board (Side A) – 14
4-3. Printed Wiring Board – MAIN Board (Side B) – 15
4-4. Schematic Diagram – SW Board, MAIN Board (1/5) – 16
4-5. Schematic Diagram – MAIN Board (2/5) – 17
4-6. Schematic Diagram – MAIN Board (3/5) – 18
4-7. Schematic Diagram – MAIN Board (4/5) – 19
4-8. Schematic Diagram – MAIN Board (5/5) – 20
4-9. Printed Wiring Board – SW Board – 21

5. EXPLODED VIEWS
5-1. Overall-1 25
5-2. Overall-2 26

6. ELECTRICAL PARTS LIST 27

\

Flexible Circuit Board Repairing

- Keep the temperature of the soldering iron around 270 °C during repairing.
- Do not touch the soldering iron on the same conductor of the circuit board (within 3 times).
- Be careful not to apply force on the conductor when soldering or unsoldering.

Notes on chip component replacement

- Never reuse a disconnected chip component.
- Notice that the minus side of a tantalum capacitor may be damaged by heat.

Microsoft, Windows and Windows Media are trademarks or registered trademarks of Microsoft Corporation in the United States and/or other countries.
US and foreign patents licensed from Dolby Laboratories.
All other trademarks and registered trademarks are trademarks or registered trademarks of their respective holders.

UNLEADED SOLDER

Boards requiring use of unleaded solder are printed with the lead-free mark (LF) indicating the solder contains no lead.
(Caution: Some printed circuit boards may not come printed with the lead free mark due to their particular size)

: LEAD FREE MARK

Unleaded solder has the following characteristics.

- Unleaded solder melts at a temperature about 40 °C higher than ordinary solder.
  Ordinary soldering irons can be used but the iron tip has to be applied to the solder joint for a slightly longer time.
  Soldering irons using a temperature regulator should be set to about 350 °C.
  Caution: The printed pattern (copper foil) may peel away if the heated tip is applied for too long, so be careful!
- Strong viscosity
  Unleaded solder is more viscou-s (sticky, less prone to flow) than ordinary solder so use caution not to let solder bridges occur such as on IC pins, etc.
- Usable with ordinary solder
  It is best to use only unleaded solder but unleaded solder may also be added to ordinary solder.

SECTION 1
GENERAL

This section is extracted from instruction manual.

Locating controls

For details about each part, refer to the pages in parentheses.

Front side

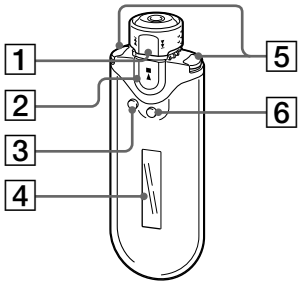

1 Shuttle switch
(pages 17 to 22, 25, 27 to 39, 41, 43)

2 ►■ button
(pages 14 to 25, 27 to 29, 31 to 39, 41, 43)

3 SEARCH/MENU button
(pages 15, 17 to 25, 27 to 29, 31 to 39, 41, 43)

4 Display (pages 10, 15, 22, 26, 40)
For details on the display and icons, refer to page 10.

5 VOL (Volume) +/– button (pages 14, 33)

6 DISP/FM (Display/FM) button (pages 26 to 27, 40)

Rear side

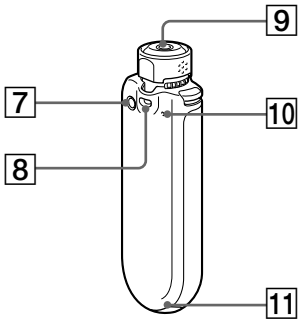

7 REPEAT/SOUND button
(pages 22 to 24, 28, 41)

8 Strap hole

9 Headphone jack (page 14)

10 Reset button (page 46)

11 USB jack (page 12)

Display

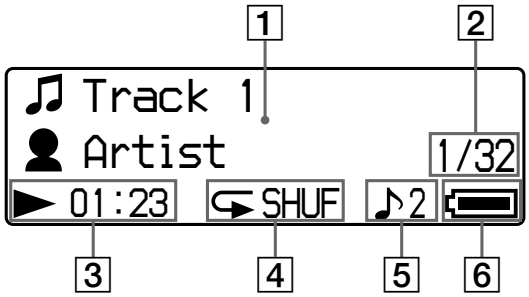

1 Text/graphic information display (pages 15, 22)
Displays album title, artist name, track number, track name, current date and time (pages 26 to 28, 31), MESSAGE (page 50) and menu.
Press the DISP/FM (Display/FM) button to switch the display mode (pages 26 to 28). Switch the display to Power Save or Display OFF mode when you do not operate the unit for a while (page 35).

2 Current track number/total track number of the Play Range
The track number currently selected or being played back and the total track number of the current Play Range is displayed.

3 Playing status indicator
Display current playback mode (►: playback, ■: stop) and elapsed time.

4 Repeat mode indication (page 22)
The current repeat mode icon is displayed.

5 Digital sound preset indication (pages 28 to 29)
The current digital sound preset is displayed if set.

6 Remaining battery indication (pages 12 to 13)
The remaining battery power is displayed.

Tip

For information on the FM tuner display, see “FM Tuner” (page 40).

Adjusting the current time setting (Date-Time)

You can set and display (except in FM tuner) the current time.

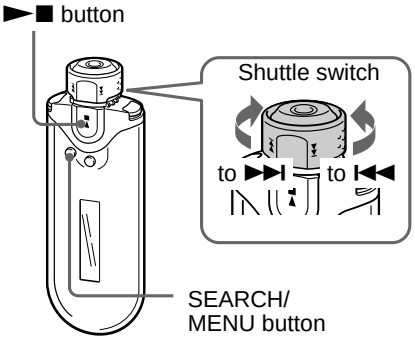

1 **Press and hold the SEARCH/ MENU button for half a second while the audio player is stopped or receiving an FM signal.**

The menu screen is displayed.

```
▶ Repeat Mode    >
  Sound          >
  Volume Mode    >
```

2 **Rotate the Shuttle switch to select "Date-Time>" and press the ►■ button to confirm.**

The year digit is displayed in [ ].

```
 Y   M   D   h   m
[2005] 01 / 01  15 : 00
```

3 **Rotate the Shuttle switch to adjust the "year" setting and press the ►■ button to confirm.**

The month digit is displayed in [ ].

```
 Y   M   D   h   m
2005 [01]/ 01  15 : 00
```

4 **As you did in step 3, adjust the settings for "month", "date", "hour", and "minute".**

After rotating the Shuttle switch to adjust the time and date setting, pressing the ►■ button to confirm.

To cancel the Menu mode

Press the SEARCH/MENU button to return the screen to the previous stage. Press repeatedly to exit menu mode.

To display the current time

Press the DISP/FM (Display/FM) button repeatedly until the "Clock" is displayed (page 26).
Note, however, when the "Clock" is set to off in the Display Screen menu (page 27), you cannot display the current time by the procedure above.

Notes

- You cannot change the display mode while using the FM tuner.
- If the unit is not used for a long time, your settings for date and time may need to be reset.
- If the current time is not set, the display for the date and time will show "––".

SECTION 2
DISASSEMBLY

Note: Follow the disassembly procedure in the numerical order given.

2-1. DISASSEMBLY FLOW

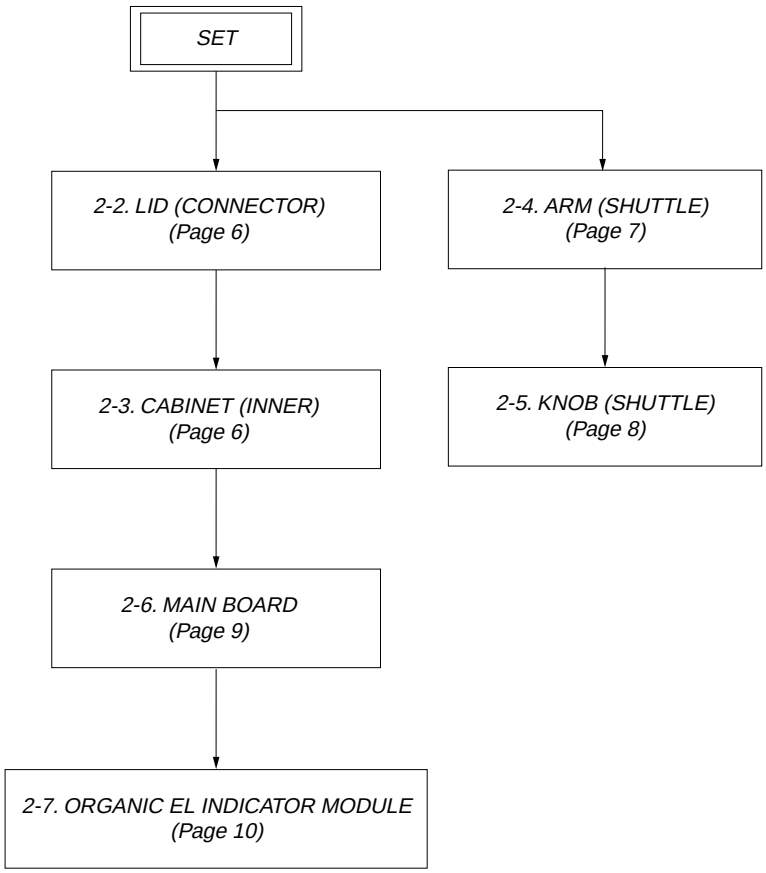

Note: Follow the disassembly procedure in the numerical order given.

2-2. LID (CONNECTOR)

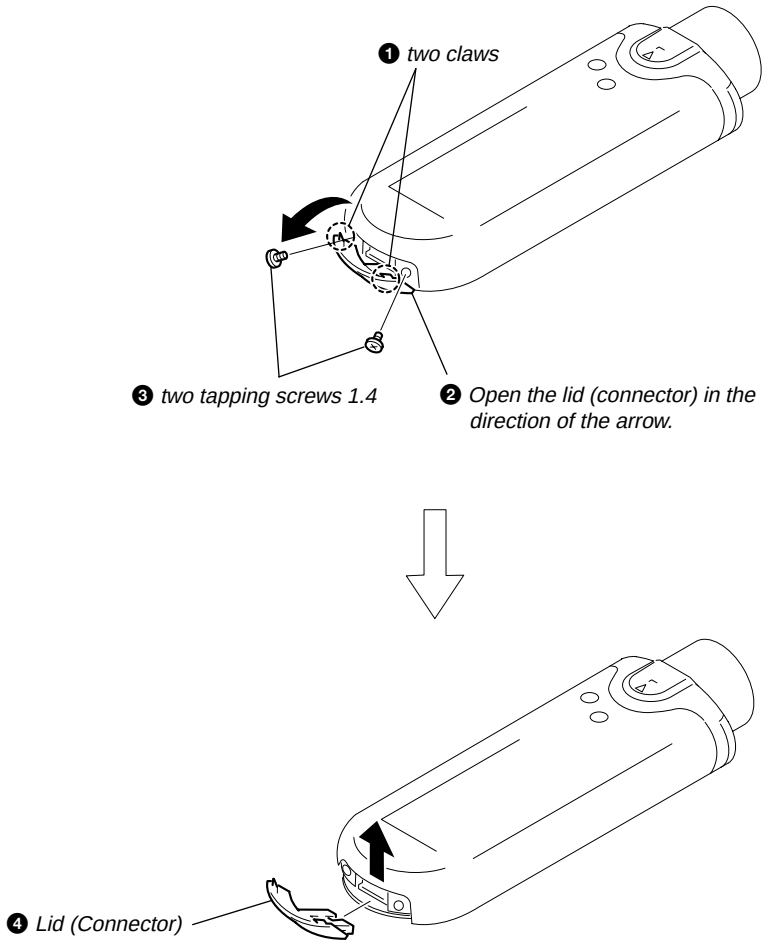

2-3. CABINET (INNER)

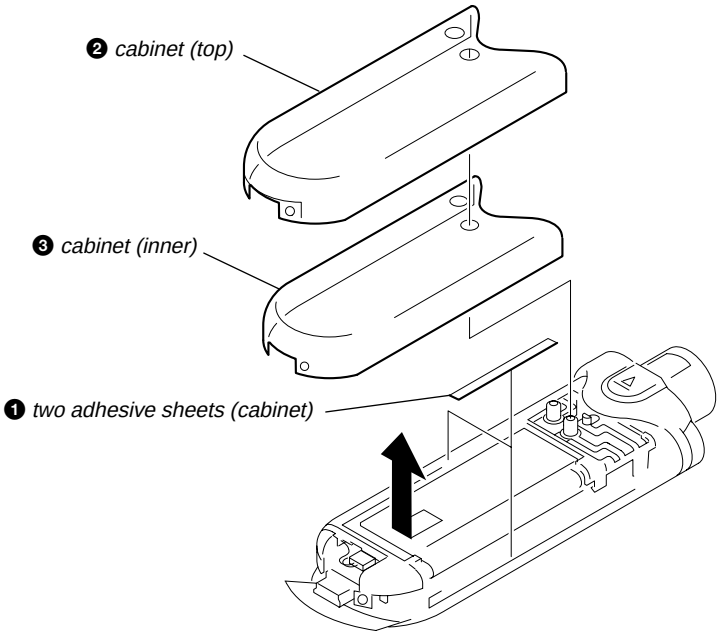

2-4. ARM (SHUTTLE)

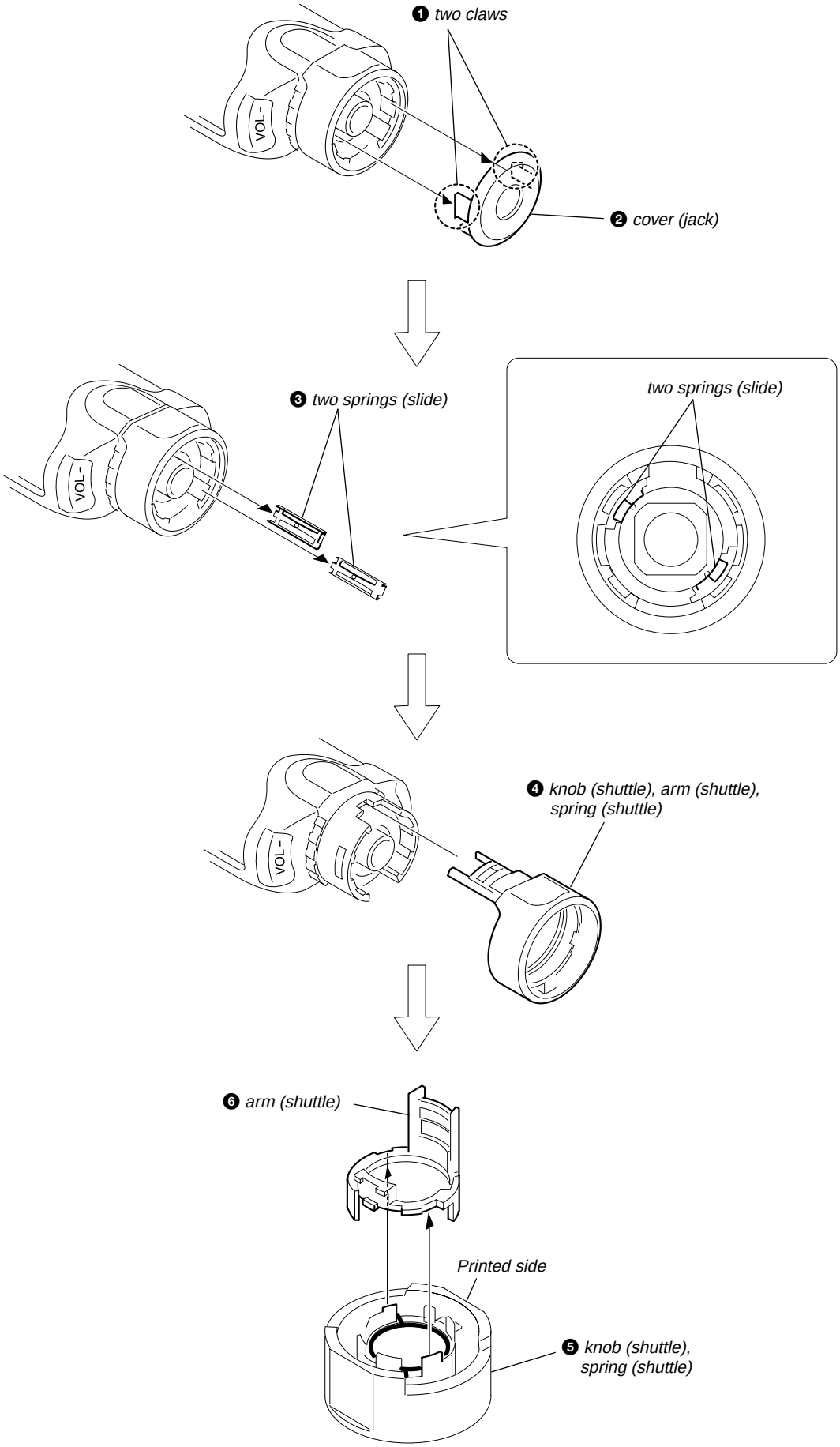

2-5. KNOB (SHUTTLE)

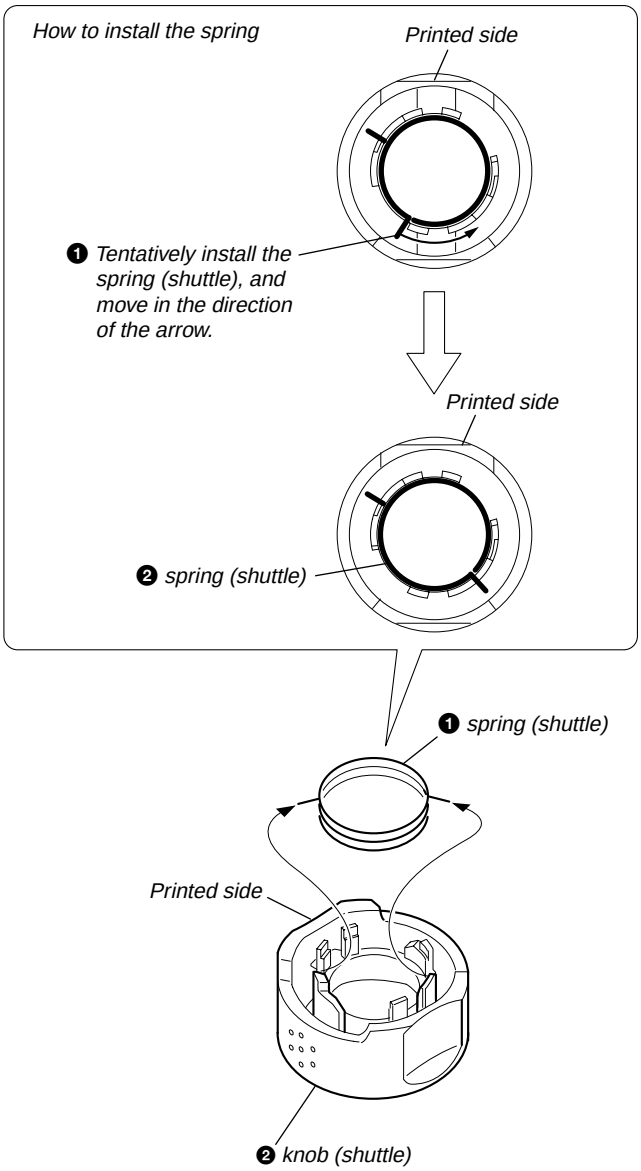

2-6. MAIN BOARD

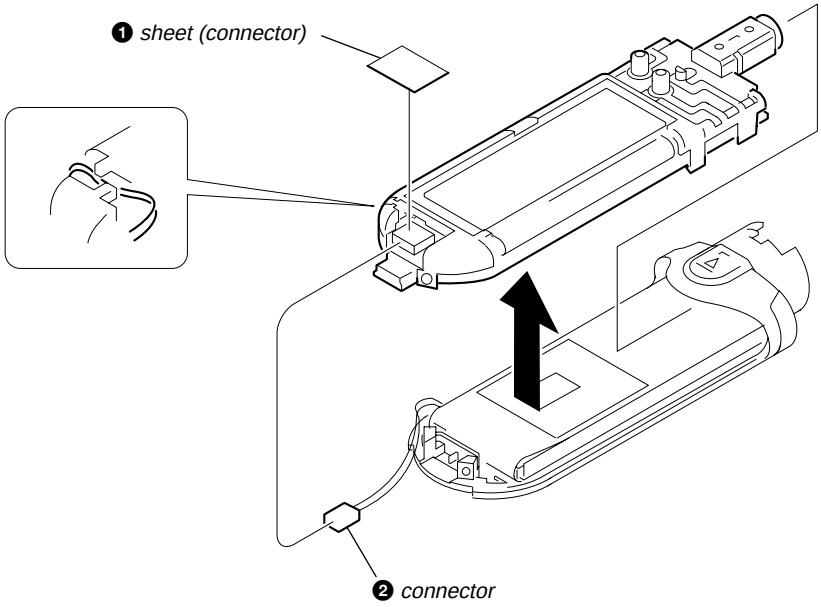

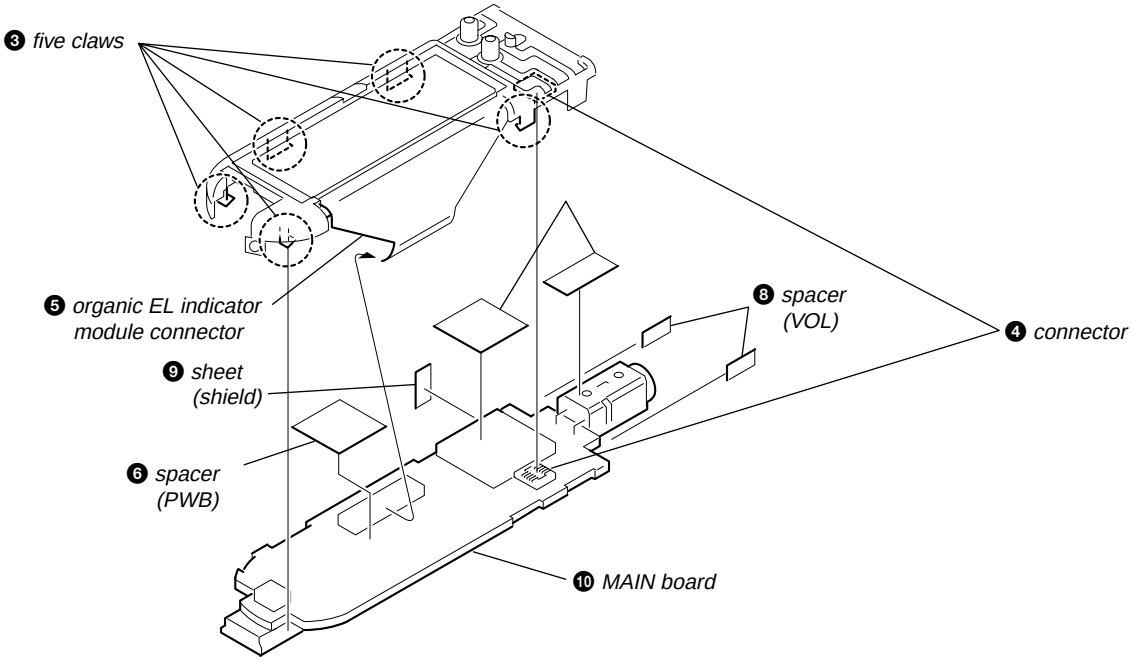

2-7. ORGANIC EL INDICATOR MODULE

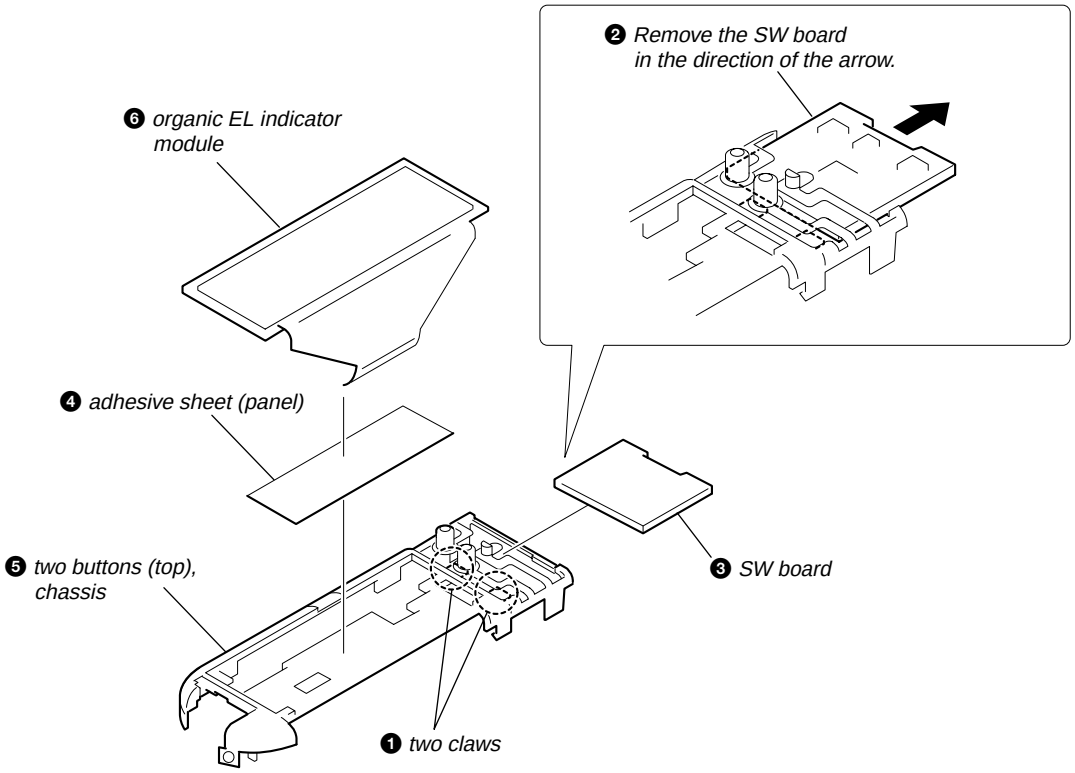

SECTION 3
TEST MODE

STANDING PROCEDURE

Procedure 1: In HOLD state, while pushing [►■] button, push [REST].
When the test mode is set, the LCD display appears as shown below.

```
256M    1.00.04    G10
```

Procedure 2: After starting up test mode, the following contents can be checked.

TEST MODE

- [►■] button
  The KEY test mode is activated. All key inputs are completed, then [►■] button is pressed, restart. (Be aware that the initialization is included on all key input.)
- [MENU] button
  Change tuner (Fmax/Fmin).
- [DISP] button
  Tuner off
- [+ ►►I] knob
  Change charge mode (100 mA/500 mA).
- [I◄◄ –] knob
  Charge on/off.
- [GROUP] on state
  LCD checked pattern.
- [GROUP] off state
  "GROUP KEY OFF" appears.
- [GROUP ←] knob
  All LCD lights on.
- [GROUP →] knob
  All LCD lights off.
- [VOL +] button
  BEEP turns on.
- [VOL –] button
  BEEP turns off.
- [• REPEAT ⬬ SOUND] button
  Initialized. (Turns to the factory preset state, time, volume setting and so on.)
  The music data, files and so on in the memory are not changed.

SECTION 4
DIAGRAMS

Note on Schematic Diagram:

- All capacitors are in µF unless otherwise noted. (p: pF) 50 WV or less are not indicated except for electrolytics and tantalums.
- All resistors are in Ω and 1/4 W or less unless otherwise specified.
- % : indicates tolerance.
- ▭ : panel designation.
- ▬ : B+ Line.
- Voltages and waveforms are dc with respect to ground under no-signal (detuned) conditions.
  no mark : PLAY
  ∗ : Impossible to measure
- Voltages are taken with a VOM (Input impedance 10 MΩ).
  Voltage variations may be noted due to normal production tolerances.
- Waveforms are taken with a oscilloscope.
  Voltage variations may be noted due to normal production tolerances.
- Circled numbers refer to waveforms.
- Signal path.
  : PLAY BACK
  : DIGITAL OUT
  : DIGITAL IN
  : TUNER
  : AUDIO

Note on Printed Wiring Board

- ○——— : parts extracted from the component side.
- ——— : parts extracted from the conductor side.
- ▬ : Pattern from the side which enables seeing.

Caution:	
Pattern face side: (Side A)	Parts on the pattern face side seen from the pattern face are indicated.
Parts face side: (Side B)	Parts on the parts face side seen from the parts face are indicated.

- MAIN board is multi-layer printed board.
  However, the patterns of intermediate-layer have not been included in the diagram.

∗ Replacement of IC400 on MAIN board requires a special tool.

- Lead Layouts

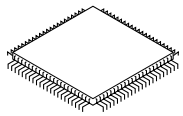

Lead layout of conventional IC

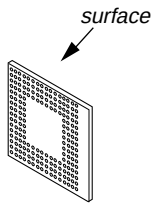

CSP (Chip Size Package)

- **Waveforms**

① IC400 ⑬⑦ (XTAL)

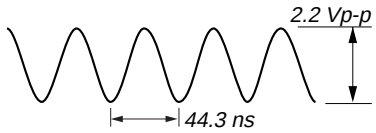

500 mV/DIV, 20 ns/DIV

② IC400 ⑭① (TX)

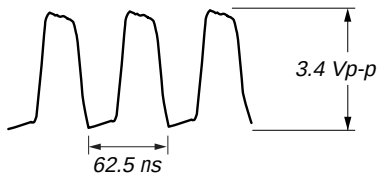

1 V/DIV, 20 ns/DIV

③ IC401 ⑧ (OSCOUT)

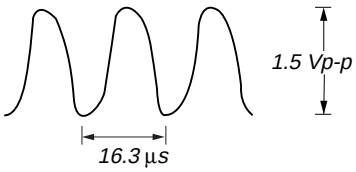

500 mV/DIV, 20 µs/DIV

4-1. BLOCK DIAGRAM

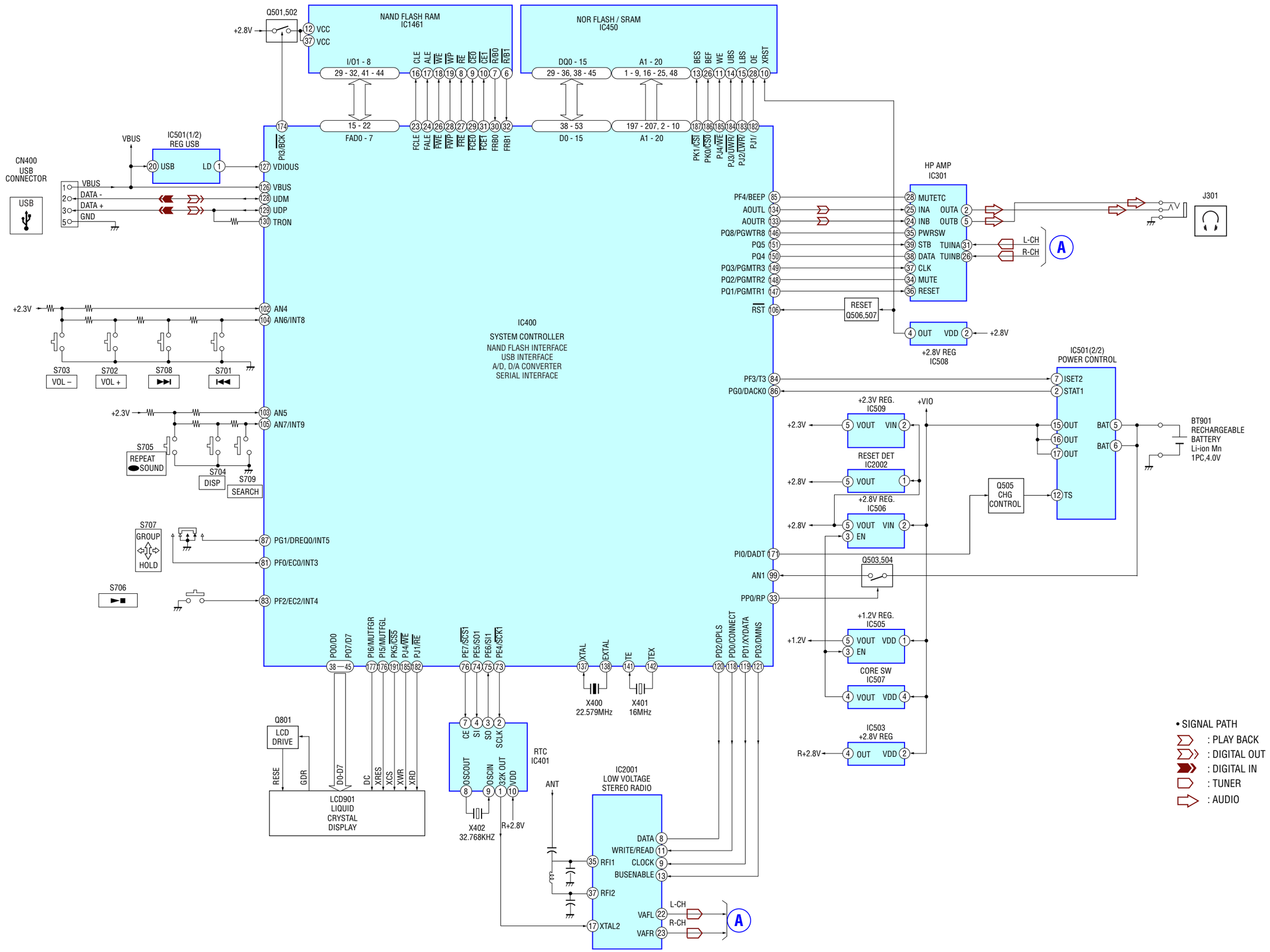

4-2. PRINTED WIRING BOARD – MAIN BOARD (SIDE A) – :Uses unleaded solder.

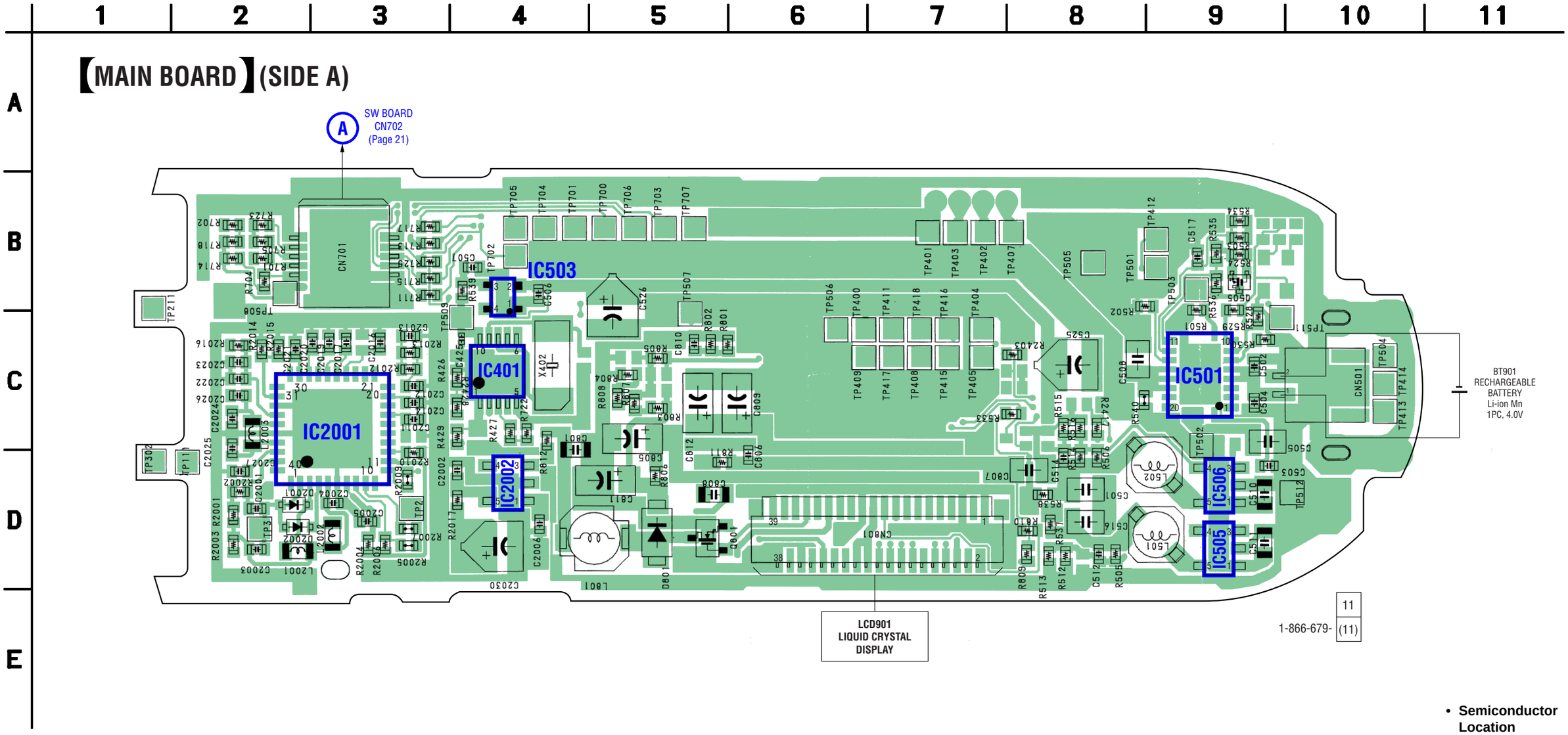

- **Semiconductor Location**

Ref. No.	Location
D801	D-5
D2001	D-2
D2002	D-2
IC401	C-4
IC501	C-9
IC503	B-4
IC505	D-9
IC506	D-9
IC2001	C-3
IC2002	D-4
Q505	B-9
Q801	D-6

4-3. PRINTED WIRING BOARD – MAIN BOARD (SIDE B) – :Uses unleaded solder.

∗ Replacement of IC400 on MAIN board requires a special tool.

☆ IC450 on MAIN board cannot be replaced individually. Replace it with "MAIN BOARD,COMPLETE" for service.

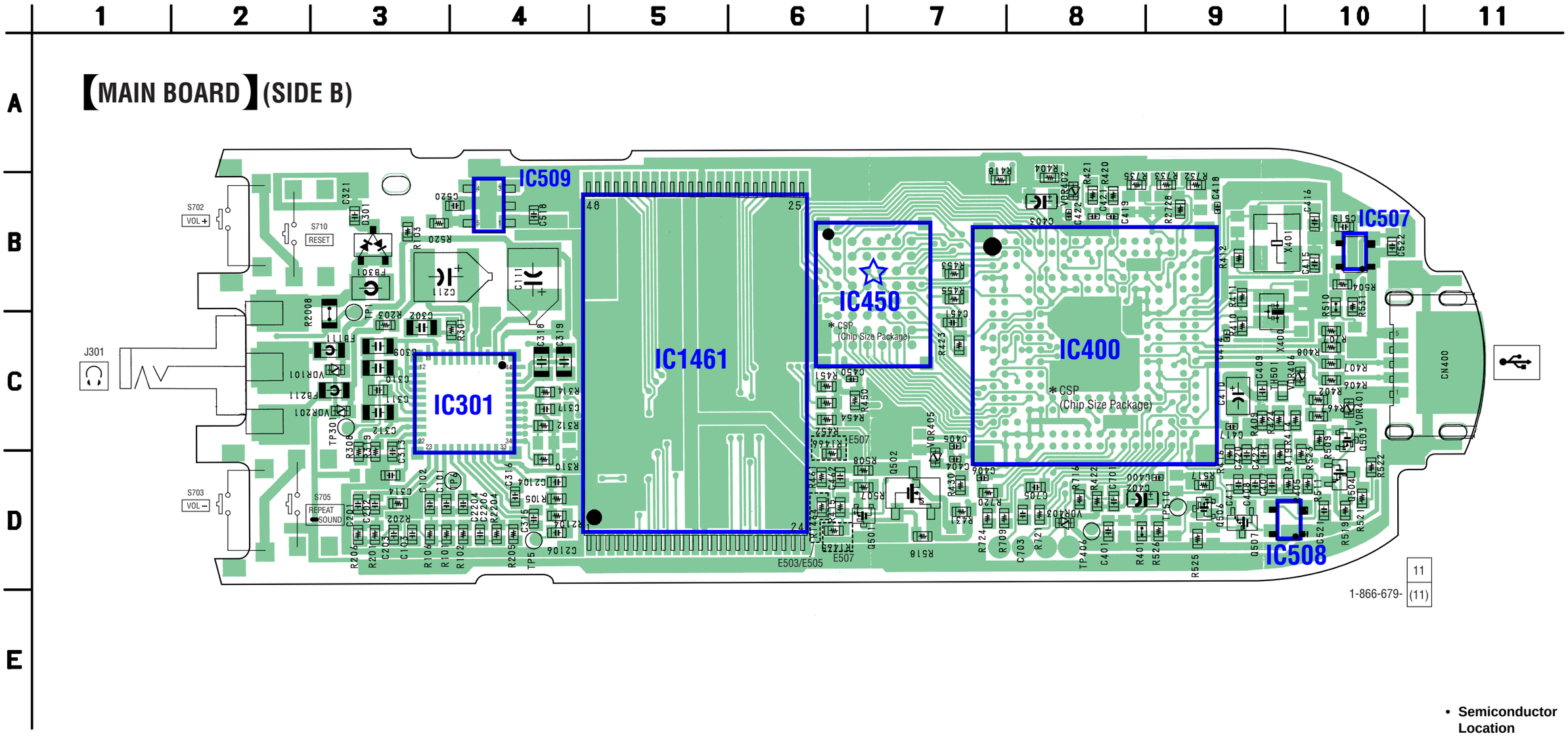

- **Semiconductor Location**

Ref. No.	Location
D301	B-3
IC301	C-4
IC400	C-8
IC450	B-6
IC507	B-10
IC508	D-10
IC509	B-4
IC1461	C-5
Q501	D-6
Q502	D-7
Q503	C-10
Q504	D-10
Q506	D-9
Q507	D-9

4-4. SCHEMATIC DIAGRAM – SW BOARD, MAIN BOARD (1/5) –

• See page 22 for IC Block Diagram. • See page 12 for Waveform.

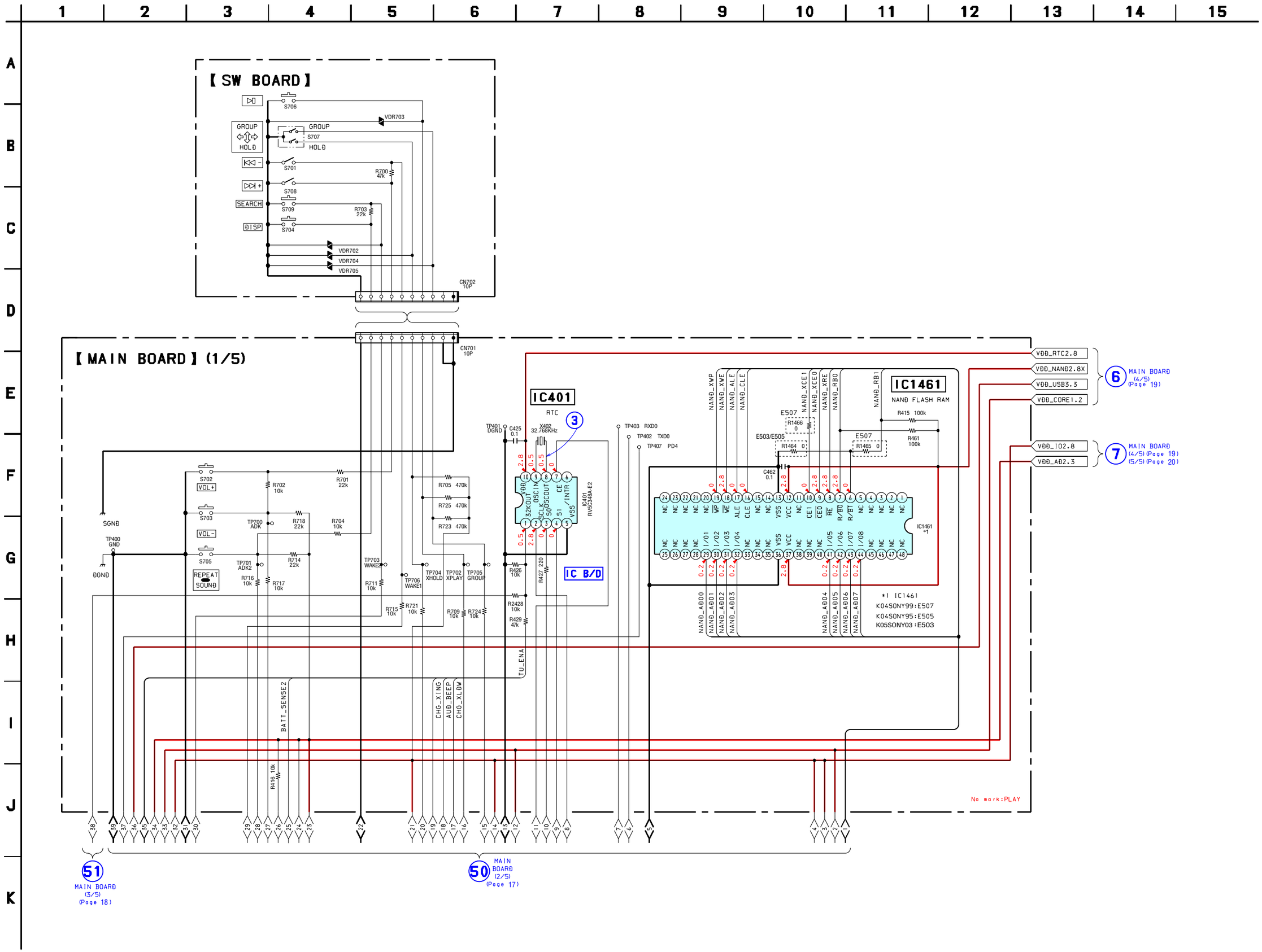

4-5. SCHEMATIC DIAGRAM – MAIN BOARD (2/5) –

• See page 12 for Waveforms.

∗ Replacement of IC400 on MAIN board requires a special tool.

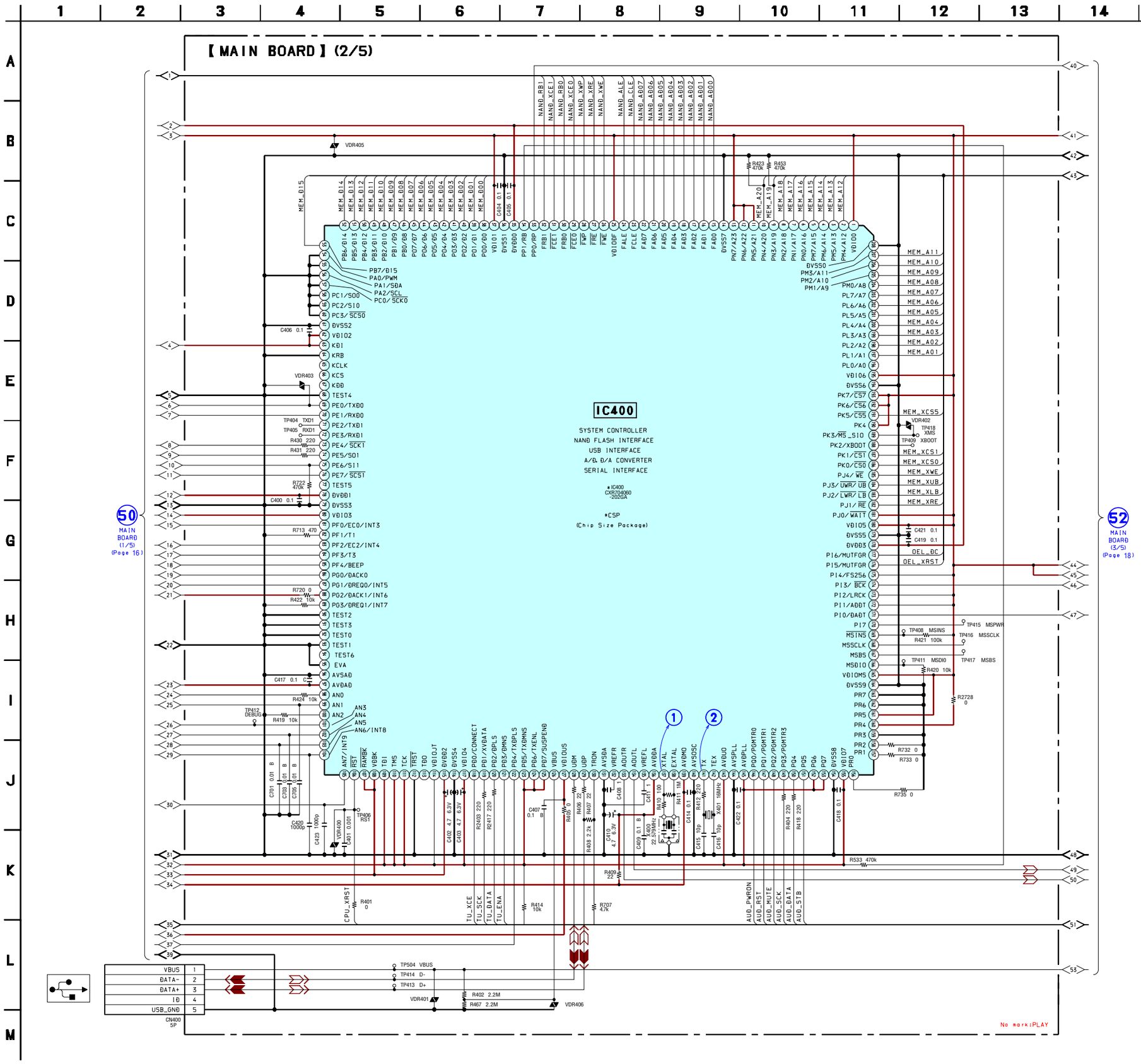

4-6. SCHEMATIC DIAGRAM – MAIN BOARD (3/5) –

☆ IC450 on MAIN board cannot be replaced individually.
Replace it with "MAIN BOARD,COMPLETE" for service.

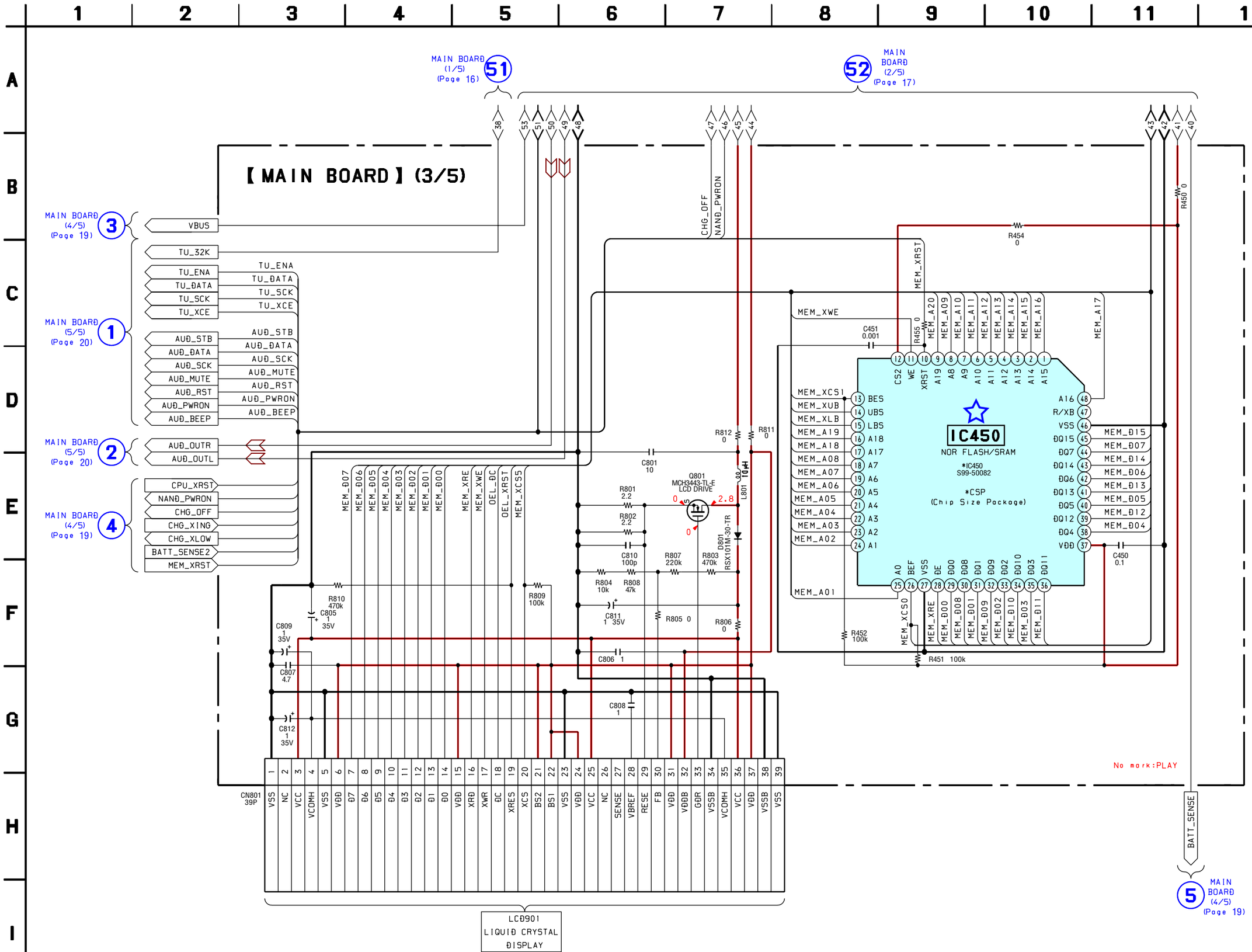

4-7. SCHEMATIC DIAGRAM – MAIN BOARD (4/5) –

• See page 22, 23 for IC Block Diagrams.

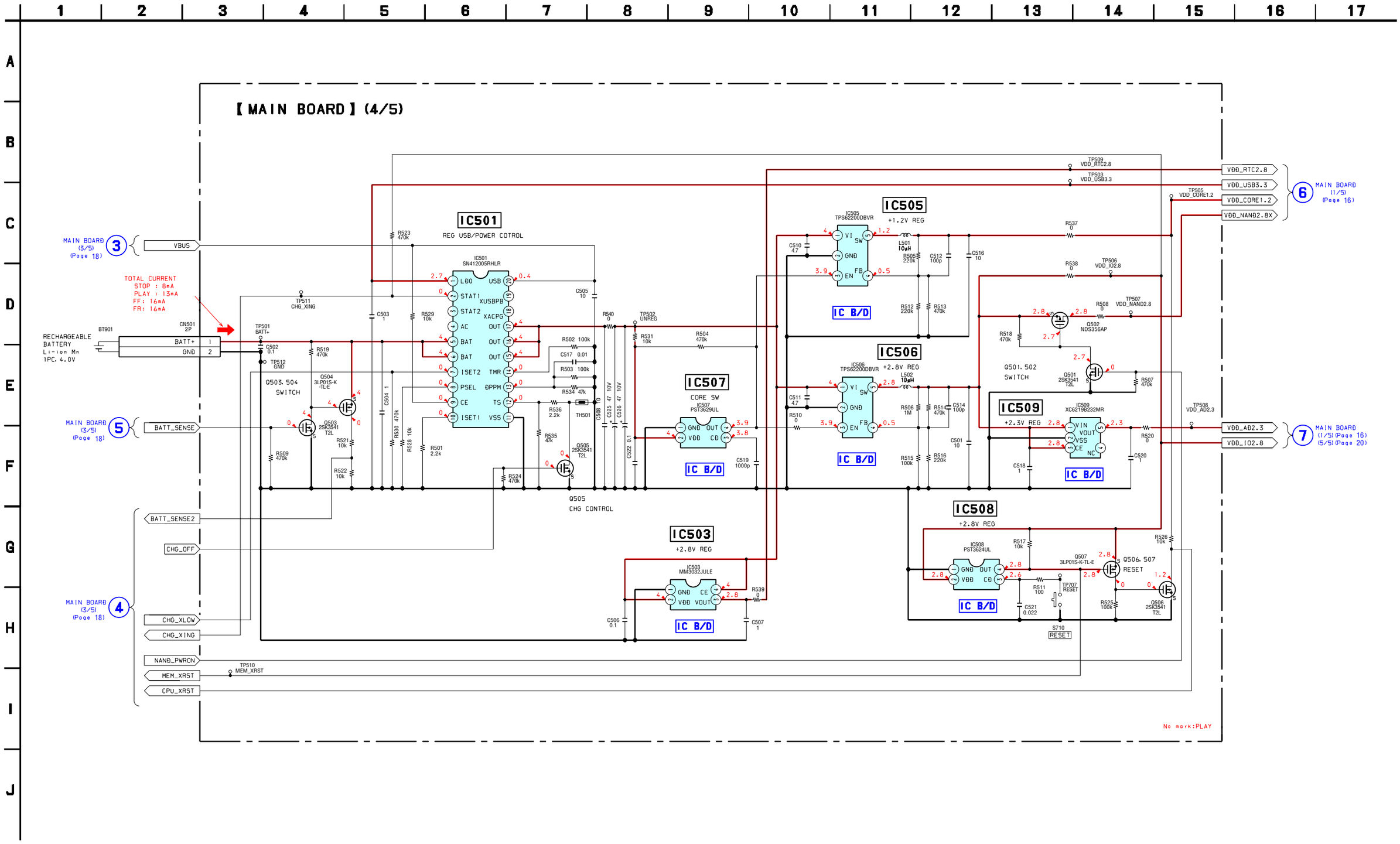

4-8. SCHEMATIC DIAGRAM – MAIN BOARD (5/5) –

• See page 22, 23 for IC Block Diagram. • See page 24 for IC Pin Function Description.

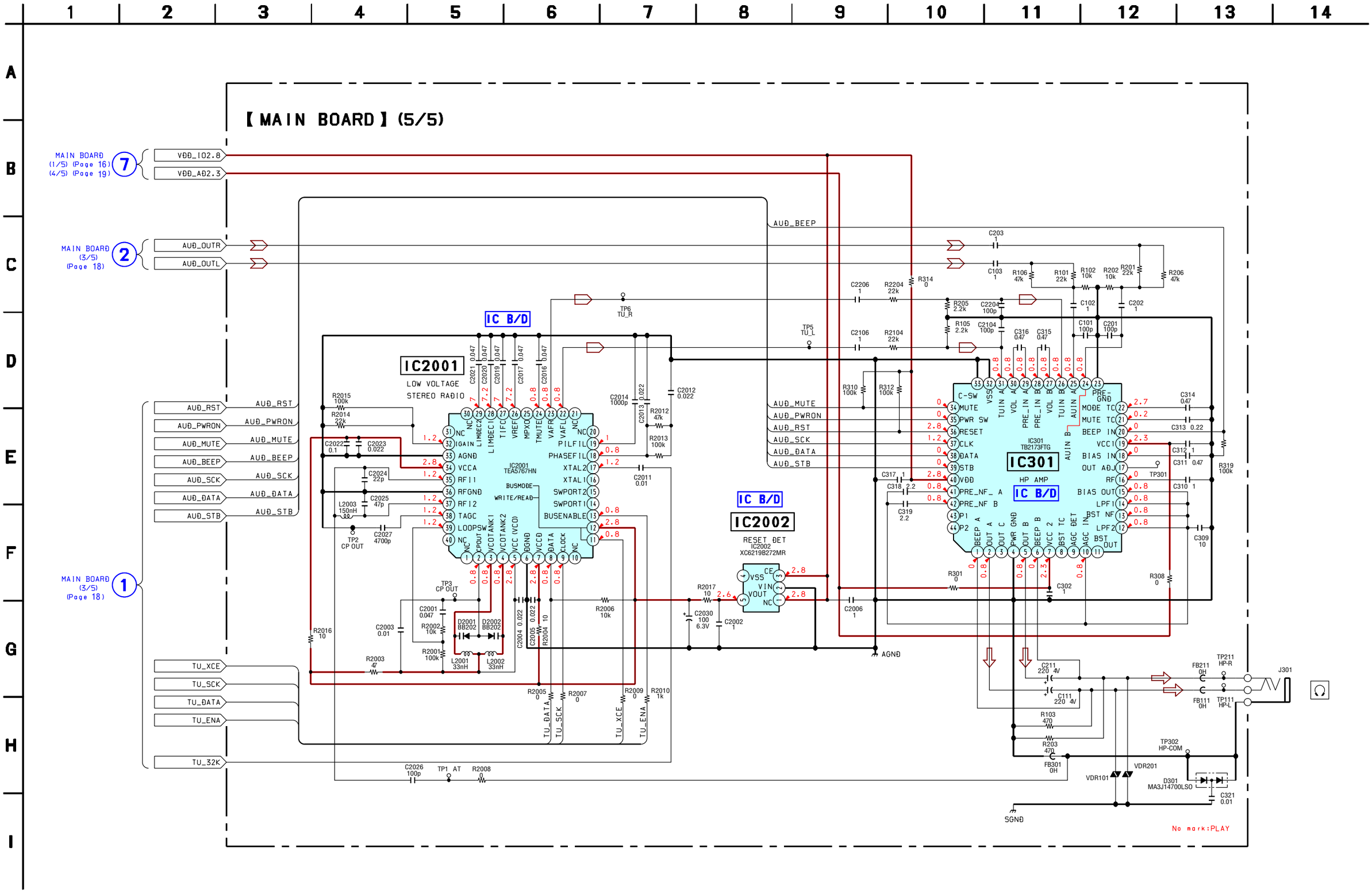

4-9. PRINTED WIRING BOARD – SW BOARD – :Uses unleaded solder.

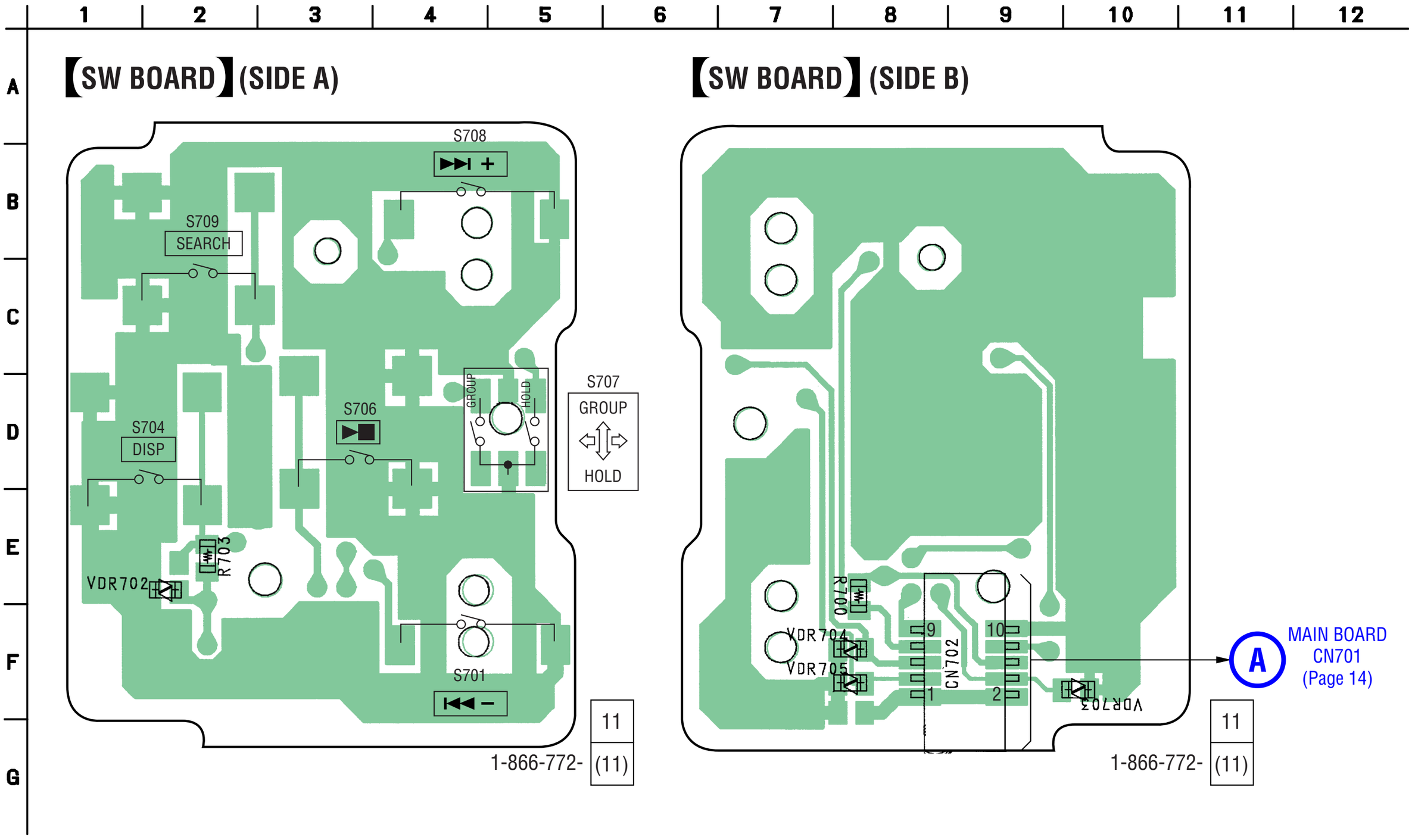

- **IC Block Diagrams**

– MAIN Board –

IC301 TB2173FTG

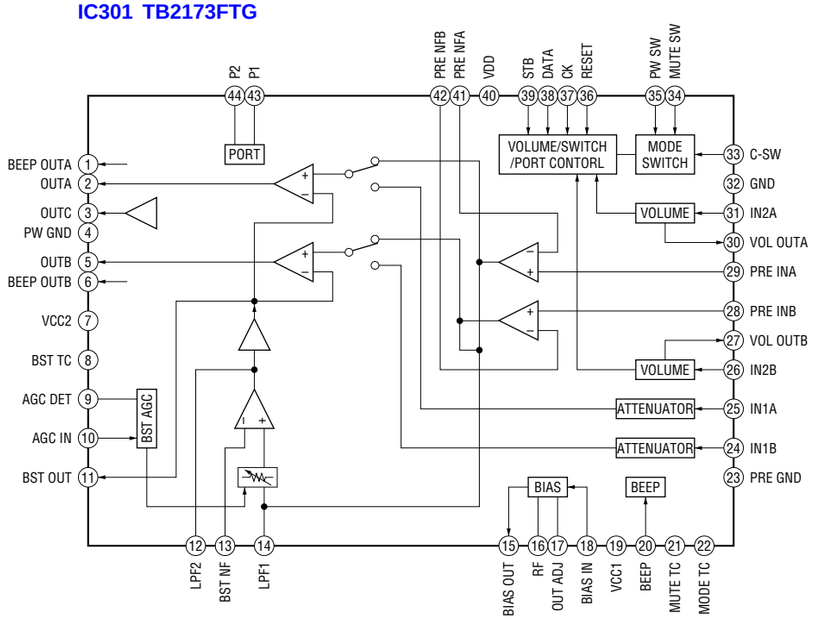

IC503 MM3032JULE

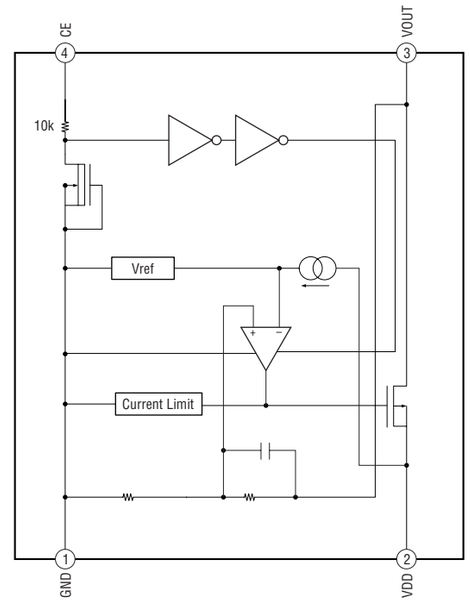

IC505, IC506 TPS62200DBVR

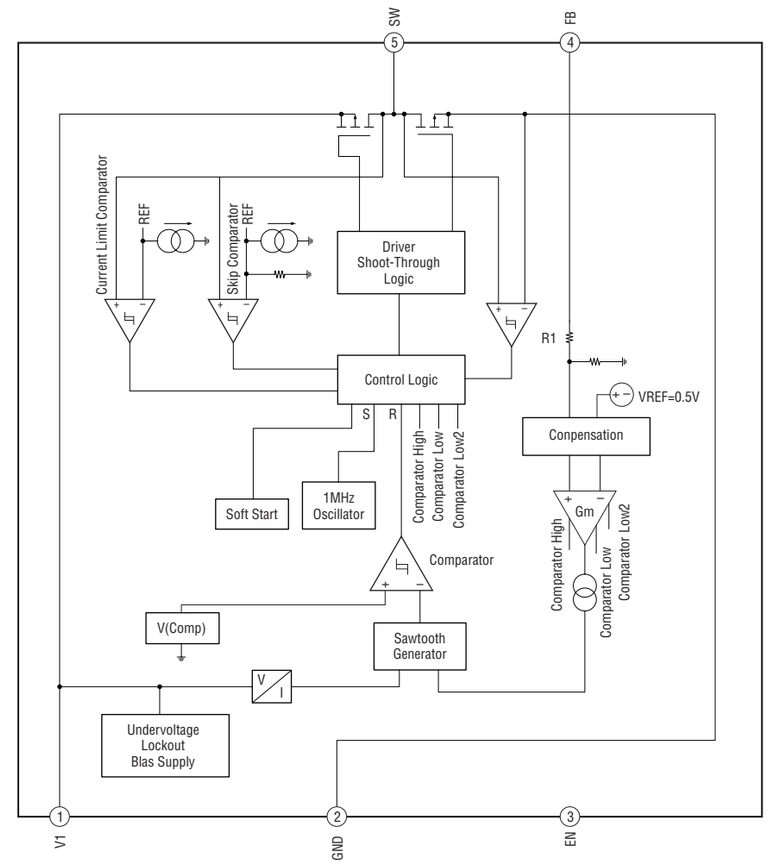

IC401 RV5C348A-E2

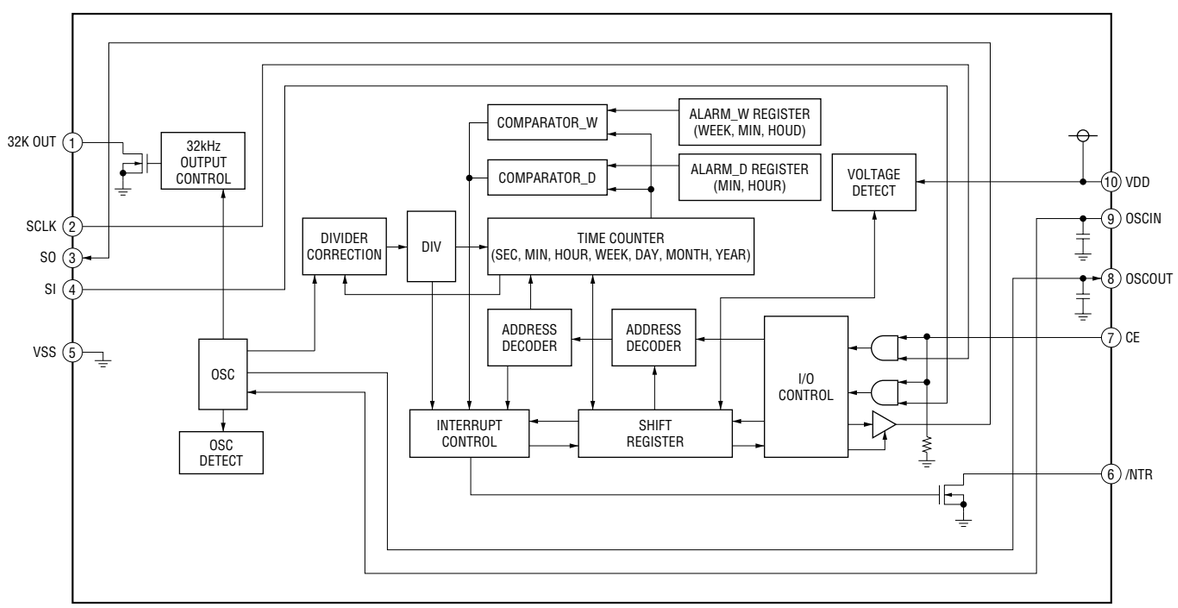

IC507 PST3629UL

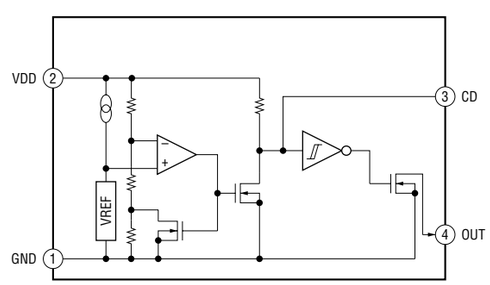

IC508 PST3624UL

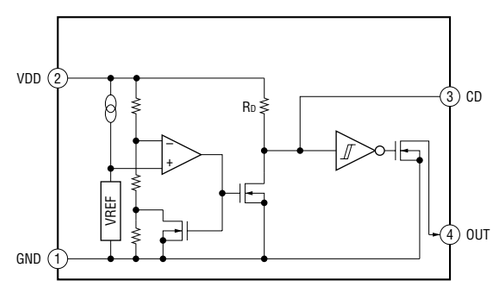

22

IC509 XC6219B232MR

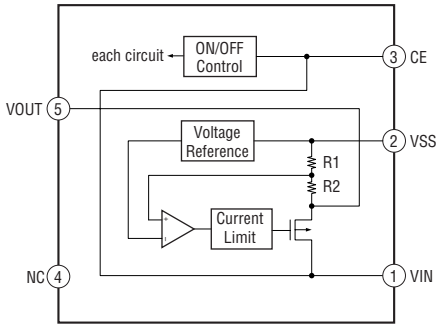

IC2001 TEA5767HN

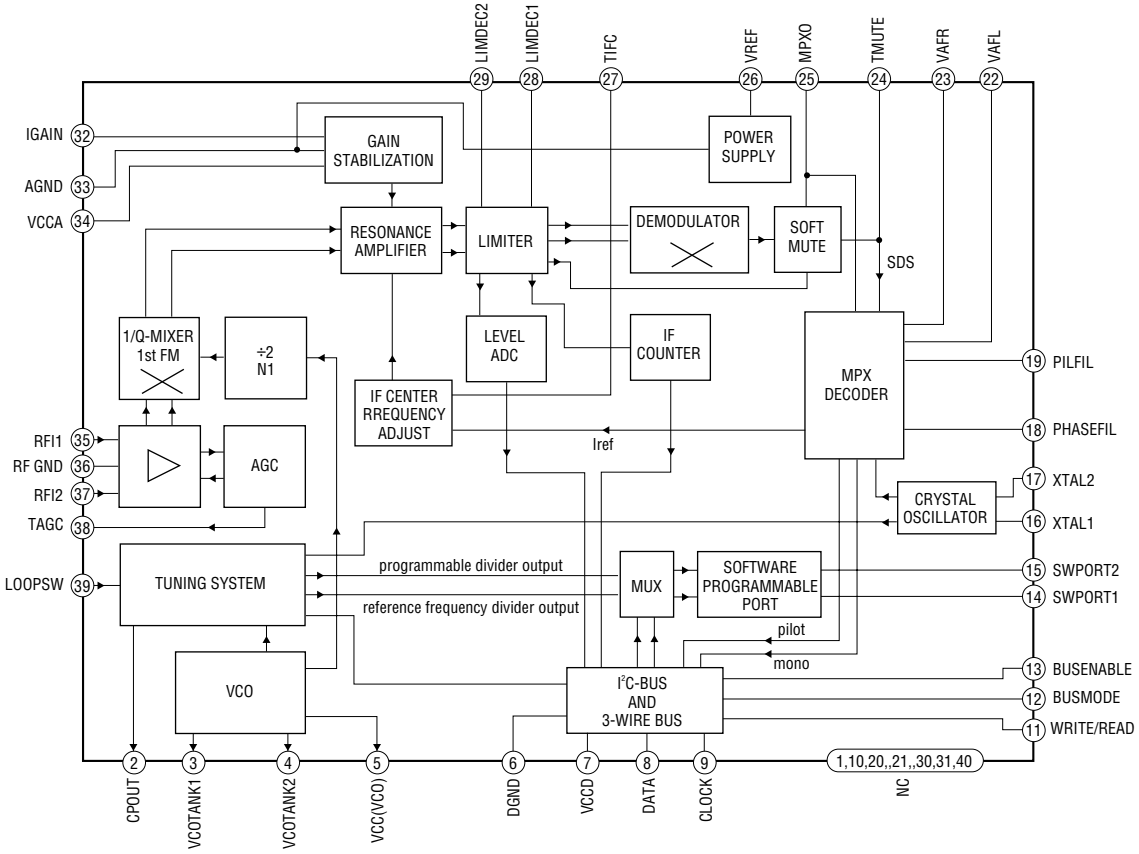

IC2002 XC6219B272MR

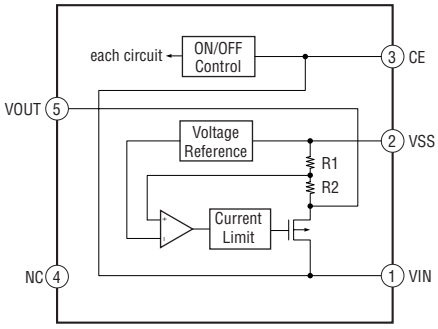

• **IC Pin Function Description**

MAIN BOARD IC2001 TEA5767HN (LOW VOLTAGE STEREO RADIO)

Pin No.	Pin Name	I/O	Description
1	NC1	—	Not used
2	CPOUT	O	Charge pump output of the synthesiser PLL
3	VCOTANK1	O	VCO tuned circuit output 1
4	VCOTANK2	O	VCO tuned circuit output 2
5	VCCVCO	—	VCO supply voltage
6	DGND	—	Ground terminal
7	VDIG	—	Digital supply voltage
8	DATA	I/O	Bus data line input/output
9	CLOCK	I	Bus clock line input
10	NC2	—	Not used
11	WRITE/READ	O	Write/read control for the 3-Wire bus
12	BUSMODE	I	Bus mode select input
13	BUSENABLE	I	Bus enable input
14	SWPORT1	—	Software programmable port 1 (Not used)
15	SWPORT2	—	Software programmable port 2 (Not used)
16	XTAL1	—	Crystal oscillator input 1 (Not used)
17	XTAL2	I	Crystal oscillator input 2
18	PHASEDET	—	Phase detector loop filter
19	PILDET	—	Pilot detector lowpass filter
20	NC3	—	Not used
21	NC4	—	Not used
22	VAFL	O	Audio left output
23	VAFR	O	Audio right output
24	TMUTE	—	Time constant for the softmute
25	MPXOUT	—	FM demodulator MPX out (Not used)
26	VREF	—	Reference voltage
27	TIFCENTER	—	Time constant for IF centre adjust
28	LIMDEC1	—	Decoupling IF limiter 1
29	LIMDEC2	—	Decoupling IF limiter 2
30	NC5	—	Not used
31	NC6	—	Not used
32	IGAIN	—	Gain control current for IF filter
33	AGND	—	Ground terminal
34	VCC	—	Analog supply voltage
35	RFIN1	—	RF input 1
36	RFGND	—	Ground terminal
37	RFIN2	—	RF input 2
38	CAGC	I	Time constant RF AGC
39	LOOPSW	O	Switch output of synthesiser PLL filter
40	NC7	—	Not used

SECTION 5
EXPLODED VIEWS

NOTE:

- -XX and -X mean standardized parts, so they may have some difference from the original one.
- Items marked "*" are not stocked since they are seldom required for routine service. Some delay should be anticipated when ordering these items.
- The mechanical parts with no reference number in the exploded views are not supplied.
- Color Indication of Appearance Parts Example:
  KNOB, BALANCE (WHITE) . . . (RED)
  ↑ Parts of Color ↑ Cabinet's Color
- Abbreviation
  CND : Canadian model
  HK : HongKong model
  KR : Korean model
  TW : Taiwan model
  JE : Tourist model

5-1. OVERALL-1

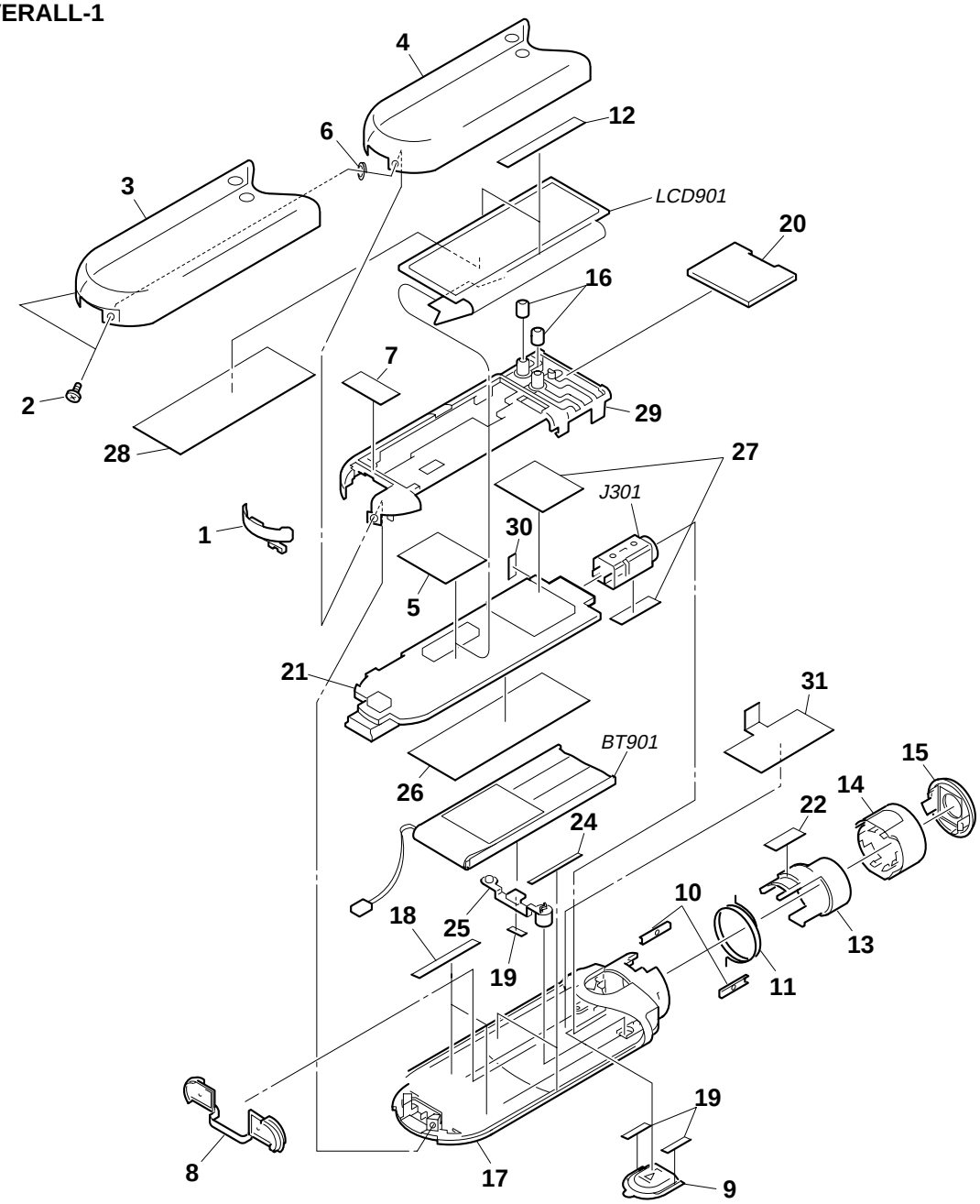

Ref. No.	Part No.	Description	Remark
1	2-595-374-01	LID (CONNECTOR)	
2	3-254-136-01	SCREW (B1.4)	
3	2-595-376-01	CABINET (TOP)	
4	2-596-548-01	CABINET (INNER) (SILVER)	
4	2-596-548-11	CABINET (INNER) (BLUE)	
4	2-596-548-21	CABINET (INNER) (PINK)	
4	2-596-548-31	CABINET (INNER) (GOLD)	
5	2-632-857-01	SPACER (PWB)	
6	2-631-678-01	SPACER (CABINET)	
7	2-631-680-04	SHEET (CONNECTOR)	
8	2-595-365-01	BUTTON (VOL)	
9	2-595-366-01	BUTTON (PS)	
10	2-595-368-01	SPRING (SLIDE)	
11	2-595-372-01	SPRING (SHUTTLE)	
12	2-631-679-01	SHEET (FLEXIBLE)	
13	2-595-373-02	ARM (SHUTTLE)	
14	2-595-371-01	KNOB (SHUTTLE)	
15	2-595-378-02	COVER (JACK)	
16	2-595-377-01	BUTTON (TOP)	
17	2-595-362-01	CABINET (BOTTOM)	

- Continued on page 26 -

5-2. OVERALL-2

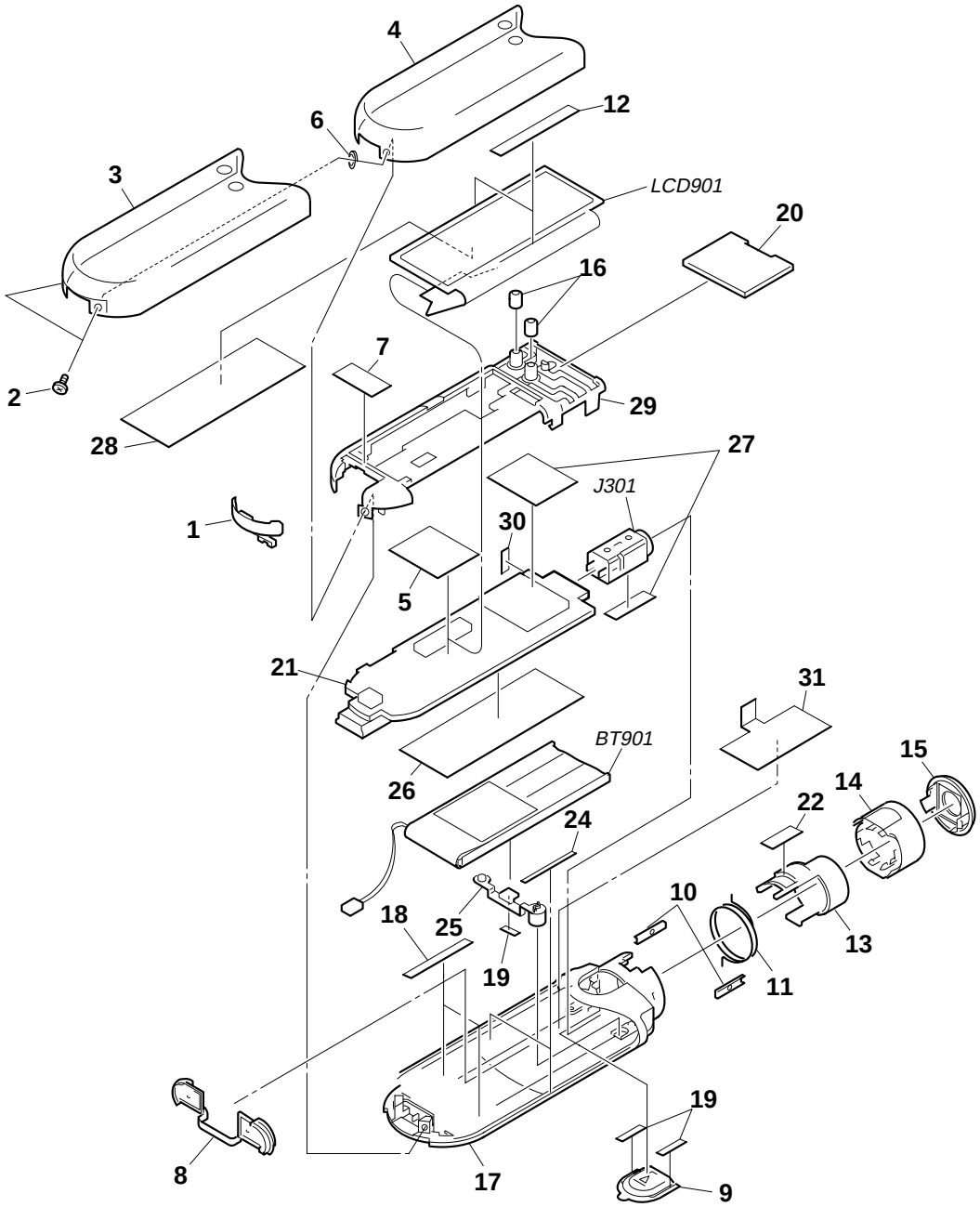

Ref. No.	Part No.	Description	Remark
- Continued from page 25 -			
18	2-595-363-01	SHEET (BATTERY), ADHESIVE	
19	2-595-367-01	SHEET (BUTTON PS), ADHESIVE	
20	A-1114-321-A	SW BOARD, COMPLETE	
21	X-2059-990-1	MAIN BOARD, COMPLETE (E503:AEP)	
21	X-2059-993-1	MAIN BOARD, COMPLETE (E503:KR)	
21	X-2059-994-1	MAIN BOARD, COMPLETE (E503:HK)	
21	X-2059-995-1	MAIN BOARD, COMPLETE (E503:US, CND)	
21	X-2059-998-1	MAIN BOARD, COMPLETE (E505:AEP)	
21	X-2059-999-1	MAIN BOARD, COMPLETE (E505:JE)	
21	X-2067-001-1	MAIN BOARD, COMPLETE (E505:KR)	
21	X-2067-002-1	MAIN BOARD, COMPLETE (E505:HK)	
21	X-2067-003-1	MAIN BOARD, COMPLETE (E505:US, CND)	
21	X-2067-004-1	MAIN BOARD, COMPLETE (E505:TW)	
21	X-2067-006-1	MAIN BOARD, COMPLETE (E507:AEP)	
21	X-2067-007-1	MAIN BOARD, COMPLETE (E507:JE)	
21	X-2067-009-1	MAIN BOARD, COMPLETE (E507:KR)	
21	X-2067-010-1	MAIN BOARD, COMPLETE (E507:HK)	

Ref. No.	Part No.	Description	Remark
21	X-2067-011-1	MAIN BOARD, COMPLETE (E507:US, CND)	
21	X-2067-012-1	MAIN BOARD, COMPLETE (E507:TW)	
22	2-634-130-01	SPACER (ARM SHUTTLE)	
23	2-634-235-01	SHEET (SHIELD)	
24	2-595-370-01	SHEET (CABINET), ADHESIVE	
25	2-595-369-01	BUTTON (BOTTOM)	
26	2-631-681-01	SPACER (BATTERY)	
27	2-629-690-01	SPACER (SHIELD PLATE)	
28	2-595-361-02	SHEET (PANEL), ADHESIVE	
29	2-595-360-01	CHASSIS	
30	2-634-872-01	SHEET (COPPER LEAF)	
31	2-634-235-01	SHEET (SHIELD)	
BT901	X-2059-979-1	BATTERY, LITHIUM (ION) STORAGE (US,CND)	
BT901	1-756-568-11	BATTERY, LITHIUM (ION) STORAGE (EXCEPT US,CND)	
J301	1-819-348-11	JACK (Ω)	
LCD901	1-805-849-11	INDICATOR MODULE, ORGANIC EL	

SECTION 6
ELECTRICAL PARTS LIST

NOTE:

- Due to standardization, replacements in the parts list may be different from the parts specified in the diagrams or the components used on the set.
- -XX and -X mean standardized parts, so they may have some difference from the original one.
- RESISTORS
  All resistors are in ohms.
  METAL: Metal-film resistor.
  METAL OXIDE: Metal oxide-film resistor.
  F: nonflammable
- Items marked "*" are not stocked since they are seldom required for routine service. Some delay should be anticipated when ordering these items.
- SEMICONDUCTORS
  In each case, u: µ, for example:
  uA. . : µA. . uPA. . : µPA. .
  uPB. . : µPB. . uPC. . : µPC. .
  uPD. . : µPD. .
- Accessories are given in the last of this parts list.

When indicating parts by reference number, please include the board name.

- CAPACITORS
  uF: µF
- COILS
  uH: µH
- Abbreviation
  CND : Canadian model
  HK : HongKong model
  KR : Korean model
  TW : Taiwan model
  JE : Tourist model

Ref. No.	Part No.	Description			Remark
	X-2059-990-1	MAIN BOARD, COMPLETE (E503:AEP)			
	X-2059-993-1	MAIN BOARD, COMPLETE (E503:KR)			
	X-2059-994-1	MAIN BOARD, COMPLETE (E503:HK)			
	X-2059-995-1	MAIN BOARD, COMPLETE (E503:US, CND)			
	X-2059-998-1	MAIN BOARD, COMPLETE (E505:AEP)			
	X-2059-999-1	MAIN BOARD, COMPLETE (E505:JE)			
	X-2067-001-1	MAIN BOARD, COMPLETE (E505:KR)			
	X-2067-002-1	MAIN BOARD, COMPLETE (E505:HK)			
	X-2067-003-1	MAIN BOARD, COMPLETE (E505:US, CND)			
	X-2067-004-1	MAIN BOARD, COMPLETE (E505:TW)			
	X-2067-006-1	MAIN BOARD, COMPLETE (E507:AEP)			
	X-2067-007-1	MAIN BOARD, COMPLETE (E507:JE)			
	X-2067-009-1	MAIN BOARD, COMPLETE (E507:KR)			
	X-2067-010-1	MAIN BOARD, COMPLETE (E507:HK)			
	X-2067-011-1	MAIN BOARD, COMPLETE (E507:US, CND)			
	X-2067-012-1	MAIN BOARD, COMPLETE (E507:TW)			
		**********			
		< CAPACITOR >			
C101	1-164-874-11	CERAMIC CHIP	100PF	5%	50V
C102	1-100-506-91	CERAMIC CHIP	1uF	20%	6.3V
C103	1-100-506-91	CERAMIC CHIP	1uF	20%	6.3V
C111	1-137-707-11	TANTAL. CHIP	220uF	20%	4V
C201	1-164-874-11	CERAMIC CHIP	100PF	5%	50V
C202	1-100-506-91	CERAMIC CHIP	1uF	20%	6.3V
C203	1-100-506-91	CERAMIC CHIP	1uF	20%	6.3V
C211	1-137-707-11	TANTAL. CHIP	220uF	20%	4V
C302	1-100-352-91	CERAMIC CHIP	1uF	20%	16V
C309	1-100-735-91	CERAMIC CHIP	10uF	20%	4V
C310	1-125-837-91	CERAMIC CHIP	1uF	10%	6.3V
C311	1-100-415-11	CERAMIC CHIP	0.47uF	10%	6.3V
C312	1-125-837-91	CERAMIC CHIP	1uF	10%	6.3V
C313	1-165-887-91	CERAMIC CHIP	0.22uF	10%	6.3V
C314	1-100-415-11	CERAMIC CHIP	0.47uF	10%	6.3V
C315	1-100-415-11	CERAMIC CHIP	0.47uF	10%	6.3V
C316	1-100-415-11	CERAMIC CHIP	0.47uF	10%	6.3V
C317	1-100-506-91	CERAMIC CHIP	1uF	20%	6.3V
C318	1-165-884-91	CERAMIC CHIP	2.2uF	10%	6.3V
C319	1-165-884-91	CERAMIC CHIP	2.2uF	10%	6.3V
C321	1-164-943-11	CERAMIC CHIP	0.01uF	10%	16V
C400	1-100-504-91	CERAMIC CHIP	0.1uF	20%	6.3V
C401	1-164-937-11	CERAMIC CHIP	0.001uF	10%	50V
C402	1-135-869-91	TANTAL. CHIP	4.7uF	20%	6.3V
C403	1-135-869-91	TANTAL. CHIP	4.7uF	20%	6.3V
C404	1-100-504-91	CERAMIC CHIP	0.1uF	20%	6.3V
C405	1-100-504-91	CERAMIC CHIP	0.1uF	20%	6.3V
C406	1-100-504-91	CERAMIC CHIP	0.1uF	20%	6.3V
C407	1-125-777-11	CERAMIC CHIP	0.1uF	10%	10V
C408	1-100-506-91	CERAMIC CHIP	1uF	20%	6.3V
C409	1-125-777-11	CERAMIC CHIP	0.1uF	10%	10V
C410	1-125-926-91	TANTAL. CHIP	4.7uF	20%	6.3V
C411	1-100-506-91	CERAMIC CHIP	1uF	20%	6.3V
C414	1-100-504-91	CERAMIC CHIP	0.1uF	20%	6.3V
C415	1-164-850-11	CERAMIC CHIP	10PF	0.5PF	50V
C416	1-164-850-11	CERAMIC CHIP	10PF	0.5PF	50V
C417	1-100-504-91	CERAMIC CHIP	0.1uF	20%	6.3V
C418	1-100-504-91	CERAMIC CHIP	0.1uF	20%	6.3V
C419	1-100-504-91	CERAMIC CHIP	0.1uF	20%	6.3V
C420	1-164-937-11	CERAMIC CHIP	0.001uF	10%	50V
C421	1-100-504-91	CERAMIC CHIP	0.1uF	20%	6.3V
C422	1-100-504-91	CERAMIC CHIP	0.1uF	20%	6.3V
C423	1-164-937-11	CERAMIC CHIP	0.001uF	10%	50V
C425	1-100-504-91	CERAMIC CHIP	0.1uF	20%	6.3V
C450	1-100-504-91	CERAMIC CHIP	0.1uF	20%	6.3V
C451	1-164-937-11	CERAMIC CHIP	0.001uF	10%	50V
C462	1-125-777-11	CERAMIC CHIP	0.1uF	10%	10V
C501	1-165-989-11	CERAMIC CHIP	10uF	10%	6.3V
C502	1-125-777-11	CERAMIC CHIP	0.1uF	10%	10V
C503	1-100-506-91	CERAMIC CHIP	1uF	20%	6.3V
C504	1-100-506-91	CERAMIC CHIP	1uF	20%	6.3V
C505	1-165-989-11	CERAMIC CHIP	10uF	10%	6.3V
C506	1-125-777-11	CERAMIC CHIP	0.1uF	10%	10V
C507	1-100-506-91	CERAMIC CHIP	1uF	20%	6.3V
C508	1-165-989-11	CERAMIC CHIP	10uF	10%	6.3V
C510	1-100-507-91	CERAMIC CHIP	4.7uF	20%	6.3V
C511	1-100-507-91	CERAMIC CHIP	4.7uF	20%	6.3V
C512	1-164-874-11	CERAMIC CHIP	100PF	5%	50V
C514	1-164-874-11	CERAMIC CHIP	100PF	5%	50V
C516	1-165-989-11	CERAMIC CHIP	10uF	10%	6.3V
C517	1-164-943-11	CERAMIC CHIP	0.01uF	10%	16V
C518	1-100-506-91	CERAMIC CHIP	1uF	20%	6.3V
C519	1-164-937-11	CERAMIC CHIP	0.001uF	10%	50V
C520	1-100-506-91	CERAMIC CHIP	1uF	20%	6.3V
C521	1-107-819-11	CERAMIC CHIP	0.022uF	10%	16V
C522	1-125-777-11	CERAMIC CHIP	0.1uF	10%	10V
C525	1-100-878-91	TANTAL. CHIP	47uF	20%	10V
C526	1-100-878-91	TANTAL. CHIP	47uF	20%	10V
C701	1-164-943-11	CERAMIC CHIP	0.01uF	10%	16V
C703	1-164-943-11	CERAMIC CHIP	0.01uF	10%	16V
C705	1-164-943-11	CERAMIC CHIP	0.01uF	10%	16V
C801	1-100-735-91	CERAMIC CHIP	10uF	20%	4V
C805	1-112-537-91	TANTAL. CHIP	1uF	20%	35V
C806	1-100-506-91	CERAMIC CHIP	1uF	20%	6.3V
C807	1-100-670-11	CERAMIC CHIP	4.7uF	20%	16V
C808	1-100-352-91	CERAMIC CHIP	1uF	20%	16V
C809	1-112-537-91	TANTAL. CHIP	1uF	20%	35V
C810	1-164-874-11	CERAMIC CHIP	100PF	5%	50V
C811	1-112-537-91	TANTAL. CHIP	1uF	20%	35V

Ref. No.	Part No.	Description			Remark
C812	1-112-537-91	TANTAL. CHIP	1uF	20%	35V
C2001	1-119-923-11	CERAMIC CHIP	0.047uF	10%	10V
C2002	1-100-506-91	CERAMIC CHIP	1uF	20%	6.3V
C2003	1-164-943-11	CERAMIC CHIP	0.01uF	10%	16V
C2004	1-107-819-11	CERAMIC CHIP	0.022uF	10%	16V
C2005	1-107-819-11	CERAMIC CHIP	0.022uF	10%	16V
C2006	1-100-506-91	CERAMIC CHIP	1uF	20%	6.3V
C2011	1-164-943-11	CERAMIC CHIP	0.01uF	10%	16V
C2012	1-107-819-11	CERAMIC CHIP	0.022uF	10%	16V
C2013	1-107-819-11	CERAMIC CHIP	0.022uF	10%	16V
C2014	1-164-937-11	CERAMIC CHIP	0.001uF	10%	50V
C2016	1-119-923-11	CERAMIC CHIP	0.047uF	10%	10V
C2017	1-119-923-11	CERAMIC CHIP	0.047uF	10%	10V
C2019	1-119-923-11	CERAMIC CHIP	0.047uF	10%	10V
C2020	1-119-923-11	CERAMIC CHIP	0.047uF	10%	10V
C2021	1-119-923-11	CERAMIC CHIP	0.047uF	10%	10V
C2022	1-125-777-11	CERAMIC CHIP	0.1uF	10%	6.3V
C2023	1-107-819-11	CERAMIC CHIP	0.022uF	10%	16V
C2024	1-164-858-11	CERAMIC CHIP	22PF	5%	50V
C2025	1-164-866-11	CERAMIC CHIP	47PF	5%	50V
C2026	1-164-874-11	CERAMIC CHIP	100PF	5%	50V
C2027	1-164-941-11	CERAMIC CHIP	0.0047uF	10%	16V
C2030	1-100-812-91	TANTAL. CHIP	100uF	20%	6.3V
C2104	1-164-874-11	CERAMIC CHIP	100PF	5%	50V
C2106	1-100-506-91	CERAMIC CHIP	1uF	20%	6.3V
C2204	1-164-874-11	CERAMIC CHIP	100PF	5%	50V
C2206	1-100-506-91	CERAMIC CHIP	1uF	20%	6.3V
		< CONNECTOR >			
CN400	1-818-513-21	CONNECTOR (SQUARE TYPE)(USB) 5P			
CN501	1-770-619-11	PIN, CONNECTOR 2P			
CN701	1-818-284-11	CONNECTOR, BOARD TO BOARD 10P			
CN801	1-818-600-11	CONNECTOR, FPC (ZIF) 39P			
		< DIODE >			
D301	8-719-059-53	DIODE MA3J14700LSO			
D801	6-500-460-01	DIODE RSX101M-30TR			
D2001	6-500-919-01	DIODE BB202			
D2002	6-500-919-01	DIODE BB202			
		< FERRITE BEAD >			
FB111	1-414-760-21	FERRITE, EMI (SMD)(1608)			
FB211	1-414-760-21	FERRITE, EMI (SMD)(1608)			
FB301	1-414-813-11	FERRITE, EMI (SMD)(2012)			
		< IC >			
IC301	6-707-074-01	IC TB2173FTG			
IC400	8-753-234-35	IC CXR704060-202GA			
IC401	8-759-641-91	IC RV5C348A-E2			
☆ IC450	- - - - - - - - - -	IC S99-50082			
IC501	6-708-160-01	IC SN412005RHLR			
IC503	6-708-158-01	IC MM3032JULE			
IC505	6-703-802-01	IC TPS62200DBVR			
IC506	6-703-802-01	IC TPS62200DBVR			
IC507	6-703-175-01	IC PST3629UL			
* IC508	6-705-243-01	IC PST3624UL			
IC509	6-708-145-01	IC XC6219B232MR			

☆ IC450 on MAIN board cannot be replaced individually.
Replace it with “MAIN BOARD,COMPLETE” for service.

Ref. No.	Part No.	Description			Remark
IC1461	6-707-829-01	IC K04SONY99 (E507)			
IC1461	6-707-830-01	IC K04SONY95 (E505)			
IC1461	6-708-162-01	IC K05SONY03 (E503)			
IC2001	6-706-069-01	IC TEA5767HN			
IC2002	6-708-198-01	IC XC6219B272MR			
		< COIL >			
L501	1-457-082-21	INDUCTOR	10uH		
L502	1-457-082-21	INDUCTOR	10uH		
L801	1-457-081-21	COIL, CHOKE	10uH		
L2001	1-400-015-21	INDUCTOR	33nH		
L2002	1-400-015-21	INDUCTOR	33nH		
L2003	1-400-032-21	INDUCTOR	150nH		
		< TRANSISTOR >			
Q501	6-551-346-01	TRANSISTOR	2SK3541T2L		
Q502	8-729-041-23	TRANSISTOR	NDS356AP		
Q503	6-551-346-01	TRANSISTOR	2SK3541T2L		
Q504	6-550-747-01	TRANSISTOR	3LP01S-K-TL-E		
Q505	6-551-346-01	TRANSISTOR	2SK3541T2L		
Q506	6-551-346-01	TRANSISTOR	2SK3541T2L		
Q507	6-550-747-01	TRANSISTOR	3LP01S-K-TL-E		
Q801	6-551-354-01	TRANSISTOR	MCH3443-TL-E		
		< RESISTOR >			
R101	1-218-969-11	RES-CHIP	22K	5%	1/16W
R102	1-218-965-11	RES-CHIP	10K	5%	1/16W
R103	1-218-949-11	RES-CHIP	470	5%	1/16W
R105	1-218-957-11	RES-CHIP	2.2K	5%	1/16W
R106	1-218-973-11	RES-CHIP	47K	5%	1/16W
R201	1-218-969-11	RES-CHIP	22K	5%	1/16W
R202	1-218-965-11	RES-CHIP	10K	5%	1/16W
R203	1-218-949-11	RES-CHIP	470	5%	1/16W
R205	1-218-957-11	RES-CHIP	2.2K	5%	1/16W
R206	1-218-973-11	RES-CHIP	47K	5%	1/16W
R301	1-218-990-11	SHORT CHIP	0		
R308	1-218-990-11	SHORT CHIP	0		
R310	1-218-977-11	RES-CHIP	100K	5%	1/16W
R312	1-218-977-11	RES-CHIP	100K	5%	1/16W
R314	1-218-990-11	SHORT CHIP	0		
R319	1-218-977-11	RES-CHIP	100K	5%	1/16W
R401	1-218-990-11	SHORT CHIP	0		
R402	1-220-804-11	RES-CHIP	2.2M	5%	1/16W
R404	1-218-945-11	RES-CHIP	220	5%	1/16W
R405	1-218-990-11	SHORT CHIP	0		
R406	1-218-933-11	RES-CHIP	22	5%	1/16W
R407	1-218-933-11	RES-CHIP	22	5%	1/16W
R408	1-218-957-11	RES-CHIP	2.2K	5%	1/16W
R409	1-218-933-11	RES-CHIP	22	5%	1/16W
R410	1-218-941-81	RES-CHIP	100	5%	1/16W
R411	1-218-989-11	RES-CHIP	1M	5%	1/16W
R412	1-218-945-11	RES-CHIP	220	5%	1/16W
R414	1-218-965-11	RES-CHIP	10K	5%	1/16W
R415	1-218-977-11	RES-CHIP	100K	5%	1/16W
R416	1-218-965-11	RES-CHIP	10K	5%	1/16W
R418	1-218-945-11	RES-CHIP	220	5%	1/16W
R419	1-218-965-11	RES-CHIP	10K	5%	1/16W

Ref. No.	Part No.	Description			Remark
R420	1-218-965-11	RES-CHIP	10K	5%	1/16W
R421	1-218-977-11	RES-CHIP	100K	5%	1/16W
R422	1-218-965-11	RES-CHIP	10K	5%	1/16W
R423	1-218-985-11	RES-CHIP	470K	5%	1/16W
R424	1-218-965-11	RES-CHIP	10K	5%	1/16W
R426	1-218-965-11	RES-CHIP	10K	5%	1/16W
R427	1-218-945-11	RES-CHIP	220	5%	1/16W
R429	1-218-973-11	RES-CHIP	47K	5%	1/16W
R430	1-218-945-11	RES-CHIP	220	5%	1/16W
R431	1-218-945-11	RES-CHIP	220	5%	1/16W
R450	1-218-990-11	SHORT CHIP	0		
R451	1-218-977-11	RES-CHIP	100K	5%	1/16W
R452	1-218-977-11	RES-CHIP	100K	5%	1/16W
R453	1-218-985-11	RES-CHIP	470K	5%	1/16W
R454	1-218-990-11	SHORT CHIP	0		
R455	1-218-990-11	SHORT CHIP	0		
R461	1-218-977-11	RES-CHIP	100K	5%	1/16W
R467	1-220-804-11	RES-CHIP	2.2M	5%	1/16W
R501	1-208-691-11	METAL CHIP	2.2K	0.5%	1/16W
R502	1-218-977-11	RES-CHIP	100K	5%	1/16W
R503	1-218-977-11	RES-CHIP	100K	5%	1/16W
R504	1-218-985-11	RES-CHIP	470K	5%	1/16W
R505	1-208-943-11	METAL CHIP	220K	0.5%	1/16W
R506	1-218-989-11	METAL CHIP	1M	0.5%	1/16W
R507	1-218-985-11	RES-CHIP	470K	5%	1/16W
R508	1-218-990-11	SHORT CHIP	0		
R509	1-218-985-11	RES-CHIP	470K	5%	1/16W
R510	1-218-990-11	SHORT CHIP	0		
R511	1-218-941-81	RES-CHIP	100	5%	1/16W
R512	1-208-943-11	METAL CHIP	220K	0.5%	1/16W
R513	1-218-985-11	METAL CHIP	470K	0.5%	1/16W
R514	1-218-985-11	METAL CHIP	470K	0.5%	1/16W
R515	1-208-935-11	METAL CHIP	100K	0.5%	1/16W
R516	1-208-943-11	METAL CHIP	220K	0.5%	1/16W
R517	1-218-965-11	RES-CHIP	10K	5%	1/16W
R518	1-218-985-11	RES-CHIP	470K	5%	1/16W
R519	1-218-985-11	RES-CHIP	470K	5%	1/16W
R520	1-218-990-11	SHORT CHIP	0		
R521	1-208-911-11	METAL CHIP	10K	0.5%	1/16W
R522	1-208-911-11	METAL CHIP	10K	0.5%	1/16W
R523	1-218-985-11	RES-CHIP	470K	5%	1/16W
R524	1-218-985-11	RES-CHIP	470K	5%	1/16W
R525	1-218-977-11	RES-CHIP	100K	5%	1/16W
R526	1-218-965-11	RES-CHIP	10K	5%	1/16W
R528	1-218-965-11	RES-CHIP	10K	5%	1/16W
R529	1-218-965-11	RES-CHIP	10K	5%	1/16W
R530	1-218-985-11	RES-CHIP	470K	5%	1/16W
R531	1-218-965-11	RES-CHIP	10K	5%	1/16W
R533	1-218-985-11	RES-CHIP	470K	5%	1/16W
R534	1-218-973-11	RES-CHIP	47K	5%	1/16W
R535	1-208-927-11	METAL CHIP	47K	0.5%	1/16W
R536	1-208-691-11	METAL CHIP	2.2K	0.5%	1/16W
R537	1-218-990-11	SHORT CHIP	0		
R538	1-218-990-11	SHORT CHIP	0		
R539	1-218-990-11	SHORT CHIP	0		
R540	1-218-990-11	SHORT CHIP	0		
R701	1-218-969-11	RES-CHIP	22K	5%	1/16W
R702	1-218-965-11	RES-CHIP	10K	5%	1/16W
R704	1-218-965-11	RES-CHIP	10K	5%	1/16W
R705	1-218-985-11	RES-CHIP	470K	5%	1/16W
R707	1-218-961-11	RES-CHIP	4.7K	5%	1/16W
R709	1-218-965-11	RES-CHIP	10K	5%	1/16W
R711	1-218-965-11	RES-CHIP	10K	5%	1/16W
R713	1-218-949-11	RES-CHIP	470	5%	1/16W
R714	1-218-969-11	RES-CHIP	22K	5%	1/16W
R715	1-218-965-11	RES-CHIP	10K	5%	1/16W
R716	1-218-965-11	RES-CHIP	10K	5%	1/16W
R717	1-218-965-11	RES-CHIP	10K	5%	1/16W
R718	1-218-969-11	RES-CHIP	22K	5%	1/16W
R720	1-218-990-11	SHORT CHIP	0		
R721	1-218-965-11	RES-CHIP	10K	5%	1/16W
R722	1-218-985-11	RES-CHIP	470K	5%	1/16W
R723	1-218-985-11	RES-CHIP	470K	5%	1/16W
R724	1-218-965-11	RES-CHIP	10K	5%	1/16W
R725	1-218-985-11	RES-CHIP	470K	5%	1/16W
R732	1-218-990-11	SHORT CHIP	0		
R733	1-218-990-11	SHORT CHIP	0		
R735	1-218-990-11	SHORT CHIP	0		
R801	1-244-161-81	RES-CHIP	2.2	5%	1/16W
R802	1-244-161-81	RES-CHIP	2.2	5%	1/16W
R803	1-218-985-11	METAL CHIP	470K	0.5%	1/16W
R804	1-208-911-11	METAL CHIP	10K	0.5%	1/16W
R805	1-218-990-11	SHORT CHIP	0		
R806	1-218-990-11	SHORT CHIP	0		
R807	1-208-943-11	METAL CHIP	220K	0.5%	1/16W
R808	1-208-927-11	METAL CHIP	47K	0.5%	1/16W
R809	1-218-977-11	RES-CHIP	100K	5%	1/16W
R810	1-218-985-11	RES-CHIP	470K	5%	1/16W
R811	1-218-990-11	SHORT CHIP	0		
R812	1-218-990-11	SHORT CHIP	0		
R1464	1-218-990-11	SHORT CHIP	0 (E503/E505)		
R1465	1-218-990-11	SHORT CHIP	0 (E507)		
R1466	1-218-990-11	SHORT CHIP	0 (E507)		
R2001	1-218-977-11	RES-CHIP	100K	5%	1/16W
R2002	1-218-965-11	RES-CHIP	10K	5%	1/16W
R2003	1-218-937-11	RES-CHIP	47	5%	1/16W
R2004	1-218-929-11	RES-CHIP	10	5%	1/16W
R2005	1-218-990-11	SHORT CHIP	0		
R2006	1-218-965-11	RES-CHIP	10K	5%	1/16W
R2007	1-218-990-11	SHORT CHIP	0		
R2008	1-216-864-11	SHORT CHIP	0		
R2009	1-218-990-11	SHORT CHIP	0		
R2010	1-218-953-11	RES-CHIP	1K	5%	1/16W
R2012	1-218-973-11	RES-CHIP	47K	5%	1/16W
R2013	1-218-977-11	RES-CHIP	100K	5%	1/16W
R2014	1-208-715-11	METAL CHIP	22K	0.5%	1/16W
R2015	1-218-977-11	RES-CHIP	100K	5%	1/16W
R2016	1-218-929-11	RES-CHIP	10	5%	1/16W
R2017	1-218-929-11	RES-CHIP	10	5%	1/16W
R2104	1-218-969-11	RES-CHIP	22K	5%	1/16W
R2204	1-218-969-11	RES-CHIP	22K	5%	1/16W
R2403	1-218-945-11	RES-CHIP	220	5%	1/16W
R2417	1-218-945-11	RES-CHIP	220	5%	1/16W
R2428	1-218-965-11	RES-CHIP	10K	5%	1/16W
R2728	1-218-990-11	SHORT CHIP	0		

Ref. No.	Part No.	Description	Remark
		< SWITCH >	
S702	1-786-860-11	SWITCH, TACTILE (VOL +)	
S703	1-786-860-11	SWITCH, TACTILE (VOL –)	
S705	1-786-453-21	SWITCH, TACTILE (REPEAT SOUND)	
S710	1-786-453-21	SWITCH, TACTILE (RESET)	
		< THERMISTOR >	
TH501	1-804-949-11	THERMISTOR, NTC (SMD)	
		< VARISTOR >	
VDR101	1-803-742-21	VARISTOR, CHIP	
VDR201	1-803-742-21	VARISTOR, CHIP	
VDR401	1-803-742-21	VARISTOR, CHIP	
VDR402	1-805-216-21	VARISTOR, CHIP	
VDR403	1-805-216-21	VARISTOR, CHIP	
VDR405	1-805-216-21	VARISTOR, CHIP	
VDR406	1-805-216-21	VARISTOR, CHIP	
		< VIBRATOR >	
X400	1-795-891-21	VIBRATOR, CERAMIC 22.579MHz	
X401	1-795-792-21	VIBRATOR, CRYSTAL 16MHz	
X402	1-795-794-21	VIBRATOR, CRYSTAL 32.768KHz	
**********			
	A-1114-321-A	SW BOARD, COMPLETE	
		**********	
		< CONNECTOR >	
CN702	1-815-874-21	CONNECTOR, BOARD TO BOARD 10P	
		< RESISTOR >	
R700	1-218-973-11	RES-CHIP 47K 5% 1/16W	
R703	1-218-969-11	RES-CHIP 22K 5% 1/16W	
		< SWITCH >	
S701	1-786-455-21	SWITCH, PUSH (1 KEY)(⏮ –)	
S704	1-771-851-41	SWITCH, TACTILE (SMD)(DISP)	
S706	1-771-851-41	SWITCH, TACTILE (SMD)(▶■)	
S707	1-786-863-21	SWITCH, PUSH (1 KEY)(GROUP/HOLD)	
S708	1-786-862-21	SWITCH, PUSH (1 KEY)(⏮ +)	
S709	1-771-851-41	SWITCH, TACTILE (SMD)(SEARCH)	
		< VARISTOR >	
VDR702	1-805-216-21	VARISTOR, CHIP	
VDR703	1-805-216-21	VARISTOR, CHIP	
VDR704	1-805-216-21	VARISTOR, CHIP	
VDR705	1-805-216-21	VARISTOR, CHIP	
**********			
		MISCELLANEOUS	
		**********	
BT901	X-2059-979-1	BATTERY, LITHIUM (ION) STORAGE (US,CND)	
BT901	1-756-568-11	BATTERY, LITHIUM (ION) STORAGE (EXCEPT US,CND)	
J301	1-819-348-11	JACK	
LCD901	1-805-849-11	INDICATOR MODULE, ORGANIC EL	
**********			

Ref. No.	Part No.	Description	Remark
		ACCESSORIES	
		**********	
	1-824-856-13	CORD, CONNECTION (E505/E507)	
	1-829-882-11	CORD, CONNECTION (USB)	
	2-187-170-01	POUCH, CARRYING (E505/E507)	
	2-596-684-11	MANUAL, INSTRUCTION (Quick Start Guide) (ENGLISH)	
	2-596-684-21	MANUAL, INSTRUCTION (Quick Start Guide) (FRENCH)(CND, AEP)	
	2-596-684-31	MANUAL, INSTRUCTION (Quick Start Guide) (GERMAN)(AEP)	
	2-596-684-41	MANUAL, INSTRUCTION (Quick Start Guide) (SPANISH)(AEP)	
	2-596-684-51	MANUAL, INSTRUCTION (Quick Start Guide) (ITALIAN)(AEP)	
	2-596-684-61	MANUAL, INSTRUCTION (Quick Start Guide) (SIMPLIFIED CHINESE)(JE)	
	2-596-684-71	MANUAL, INSTRUCTION (Quick Start Guide) (TRADITIONAL CHINESE)(HK, KR, TW, JE)	
	2-596-684-81	MANUAL, INSTRUCTION (Quick Start Guide) (KOREAN)(HK, KR, JE)	
	2-598-753-01	CLIP	
	2-629-266-23	SOFT (CD-ROM), APPLICATION (SonicStage software, PDF file Operating Instructions and PDF file SonicStage Operating Instructions)	
	8-912-742-91	EARPHONES MDR-E0931SPB9 SET (E505/E507)	
	8-912-744-99	RECEIVER MDR-E808LP/C5 SET (E503)	

MEMO

REVISION HISTORY

Clicking the version allows you to jump to the revised page.
Also, clicking the version at the upper right on the revised page allows you to jump to the next revised page.

Ver.	Date	Description of Revision
1.0	2005.04	New
1.1	2005.05	Addition of Canadian model, Taiwan model and Tourist model for NW-E505, NW-E507.
		Correction of the MAIN board Q502 polarity description error (SPM-05064)
1.2	2005.06	Addition of the name of the instruction manual (SPM-05085)
1.3	2005.07	Corrected with color indication of reference number 4 (SPM-05115)
		Changed part number of SOFT (CD-ROM), APPLICATION (SPM-05119)
1.4	2005.09	Addition of spacer (ARM SHUTTLE) and SHEET (COPPER LEAF) (ECN-ECA94773)
		Change of Parts number of Ref. No. 7, 13, 15 and 28 (SPM-05145)
		Addition of the Part No. for Ref. No. BT901 for except US and Canadian models (SPM-05149)
1.5	2005.10	Deletion of Part No. for IC450 (SPM-05158)